MCX-J
MCX-H
MCX-GH

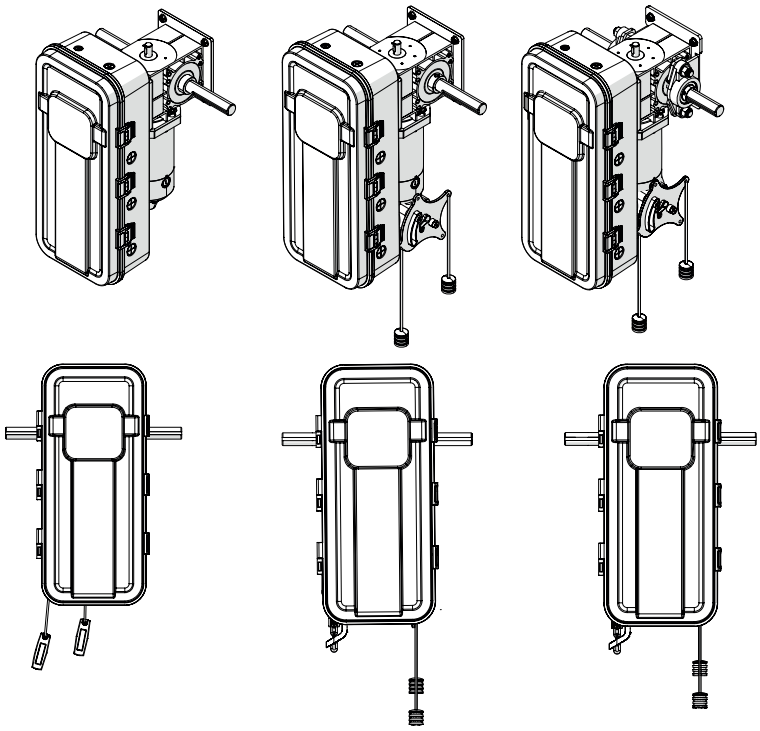

Automation for sectional and rolling commercial doors

EN - Instructions and warnings for installation and use

FR - Instructions et avertissements pour l'installation et l'utilisation

ES - Instrucciones y advertencias para la instalación y el uso

Nice

TABLE OF CONTENTS

1 WARRANTY . . . 3

2 SELECTION GUIDE . . . 4

3 VERIFICATION OF OPERATOR AND HARDWARE . . . 5

4 MCX-J, MCX-H AND MCX-GH SPECIFICATIONS . . . 6

5 OPERATOR DIMENSIONS. . . . 7

6 IMPORTANT SAFETY INSTRUCTIONS . . . 8

7 IMPORTANT INSTALLATION INSTRUCTIONS . . . 8

8 INSTALLATION INSTRUCTIONS. . . . 9

8.1 Brake kit Installation (MV00541 or MV00543) . . . 10

8.2 MCX Control station Installation . . . 12

8.3 Operator Installation . . . 13

9 ELECTRICAL CONNECTIONS . . . 15

10 CONNECTION OF POWER SUPPLY AND MCX CONTROL STATION . . . 16

10.1 Operator Electrical Connections and Start-up Instructions . . . 16

10.1.1 Connect Power supply . . . 16

10.1.2 Connect wall station (required) . . . 17

10.1.3 Connect Safety Devices . . . 18

10.1.4 Wire Electric Edge Connection . . . 18

10.1.5 On Board O/C/S/L PBS Instructions . . . 19

10.1.6 Connection of optional External O/C/S PBS (MV00003) . . . 19

10.1.7 Connection of OPTIONAL External Single-Button Device (MV00001) . . . 19

10.1.8 24 Volt power: . . . 20

11 PROGRAMMING INSTRUCTIONS . . . 21

11.1 Install & setup PIN . . . 21

11.2 MCX Control Station . . . 21

11.3 Menu tree . . . 22

11.4 Language selection . . . 23

11.5 Factory reset . . . 23

11.6 Nice G.O. App Installation . . . 23

11.7 Connect To WI-FI . . . 23

11.8 Open/Close Limit Setting . . . 24

11.9 Choose Mode of Operation . . . 24

11.10 Firmware update . . . 25

11.11 Run-Timer . . . 25

11.12 Mid-Stop Setup . . . 25

11.13 Delay on Close Setup . . . 26

11.14 Receiver Programming . . . 26

11.15 Installing the Antenna . . . 26

11.16 Programming the On-Board Radio Receiver . . . 26

11.17 Replacing Remote Control Batteries . . . 27

12 APPENDIX I: INSTALLATION OF Nice N-1 OR N-4 PHOTOCELLS . . . 28

12.1 Safety Precautions Installation . . . 28

12.2 Installation Nice N-1 Photocell (MK00649) . . . 28

12.2.1 Wall installations . . . 28

12.3 Installation FRABA N-4/4 Thru-Beam Photocell (MK00697) . . . 29

13 APPENDIX II: EMERGENCY MANUAL OPERATION . . . 31

14 APPENDIX III: EXPLODED DIAGRAMS . . . 33

15 APPENDIX IV: PCBA CONNECTION . . . 36

16 OPERATOR MAINTENANCE. . . . 37

1 WARRANTY

NICE NORTH AMERICA warrants that materials and workmanship are free from manufacturing defects for a period of five (5) years or the applicable cycle limit (whichever comes first). Cycle limits: 100,000 cycles for MCX-J and MCX-H; 140,000 cycles for MCX-GH. The start of the warranty will be determined by the date of the invoice. Materials returned to Nice deemed defective after examination will be returned at the option of Nice with repaired, new, or re-manufactured parts.
NICE NORTH AMERICA will not be responsible for any charges incurred in the process of returning defective material. All returned material must be received pre-paid, or it will not be accepted.
This warranty is limited, and is in lieu of all other warranties, expressed or implied. There is no expressed liability on the part of the seller.

This equipment has been tested and found to comply with the limits for a Class A digital device, pursuant to part 15 of the FCC Rules. These limits are designed to provide reasonable protection against harmful interference when the equipment is operated in a commercial environment. This equipment generates, uses, and can radiate radio frequency energy and, if not installed and used in accordance with the instruction manual, may cause harmful interference to radio communications. Operation of this equipment in a residential area is likely to cause harmful interference in which case the user will be required to correct the interference at his own expense.

Contains Transmitter Modules with FCC ID: **JCQMIC-TX** and **2AC7Z-ESP32WROVERE**

IMPORTANT SAFETY INSTRUCTIONS

Hazards, associated with automatic doors, can be reduced with proper site design, installation, and use. Installers, maintenance crews, and owners/users must read and follow the safety requirements found in **Nice** product manuals.

It is important that only qualified installers handle installation of Nice Commercial Door operators.

A “qualified” installer has one of the following:

1. A minimum of three years experience installing similar equipment.
2. Proof of attending Nice Technical Training seminar within the past three years.
3. Significant manufacturer endorsements of technical aptitude in Door operator installation and operation.

2 SELECTION GUIDE

Table 1

MAXIMUM DOOR SIZE BY TYPE														
				Sectional Doors						Rolling Doors				
			Uninsulated Steel	24 ga	22 ga	20 ga	18 ga	16 ga		24 ga	22 ga	20 ga	18 ga	16 ga
			Insulated Steel			24 ga	22 ga	20 ga	16 ga					
			Fibreglass	**Aluminum Door**		Wood Door				**Aluminum Grill**	Aluminum Door			
		Model/HP	Max sq ft											
Jackshaft	Continuous Duty	MCX-J/H 1/2HP	390	365	330	305	280	230	200	390	350	260	240	190
		MCX-H/GH 1HP	625	605	550	500	445	400	310	625	525	400	360	300

Table 2

PART NUMBER LIST	
PN	**Description**
MR00055	Hand Crank (MCX-J)
MV00540	Dual voltage transformer 480V/600V
MV00541	Brake Assembly
MK01760	Relay Expansion Board
MM00645	Wall Mount Plate - Legacy Pro-GH Mounting Footprint (2/box)
MM00651	Wall Mount Plate - Legacy Pro-H/Pro-J Mounting Footprint (2/box)
MR00057	Hand Chain 29.5'
MW00024	Chain Spreader 1" - 1"
MW00025	Chain Spreader 1" - 1-1/4"
MK00647	Nice single button transmitter
MK00653	Nice 3 button O/S/C transmitter
MK00659	Nice 3 channel (1,2,3) transmitter

Table 3

MAXIMUM DOOR HEIGHT BY SPROCKET SIZE					
SECTIONAL DOOR					
Drum size (in)	4	4	5.25	5.25	5.25
Door Sprocket	B23	B18	B23	B18	B15
Max Door Height (ft)	**12**	**16**	**16**	**22**	**24**
Speed (in/s)*	6	8	8	10	12

(*) Speed can be adjusted in the Door Speed menu.

Table 4

MAXIMUM DOOR HEIGHT BY SPROCKET SIZE									
ROLLING DOOR - 4" BARREL									
Drum size (in)	0.75	0.75	0.75	1	1	1	1.25	1.25	1.25
Door Sprocket	B60	B50	B40	B60	B50	B40	B60	B50	B40
Max Door Height (ft)	**8**	**12**	**16**	**10**	**14**	**20**	**10**	**14**	**22**
Speed (in/s)*	4	6	8	5	7	10	6	8	11
ROLLING DOOR - 6" BARREL									
Door Thickness (in)	0.75	0.75	0.75	1	1	1	1.25	1.25	1.25
Door Sprocket	B60	B50	B40	B60	B50	B40	B60	B50	B40
Max Door Height (ft)	**10**	**14**	**20**	**12**	**16**	**22**	**14**	**18**	**24**
Avg. Speed (in/s)*	5	7	10	6	8	11	7	9	13
ROLLING DOOR - 8" BARREL									
Door Thickness (in)	0.75	0.75	0.75	1	1	1	1.25	1.25	1.25
Door Sprocket	B60	B50	B40	B60	B50	B40	B60	B50	B40
Max Door Height (ft)	**14**	**18**	**24**	**14**	**20**	**24**	**16**	**22**	**30**
Avg. Speed (in/s)*	7	9	12	7	10	13	8	11	15

(*) Speed can be adjusted in the Door Speed menu.

WARNING! Do not connect to electrical power during installation or servicing of operator.

For any questions concerning the safety or operation of this operator, please contact Nice at 1-877-888-1116. Save these instructions.

3 VERIFICATION OF OPERATOR AND HARDWARE

Upon delivery of your Nice heavy-duty jackshaft door operator, please inspect the unit carefully for damage. Verify that operator control wiring option, HP, voltage, phase and amperage match your available power supply and door application. Confirm you have received all standard hardware listed below.

Table 5

VERIFICATION OF OPERATOR AND HARDWARE	
Description	**Hardware**
1 x MCX Control Station	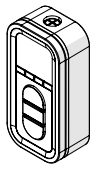
1 x #50 Drive chain package: 4’ c/w #50 connecting link	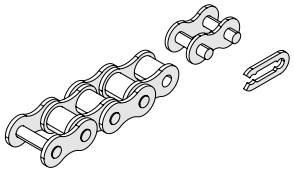
1 x Drive Sprocket 50B12 x 1” c/w 2 set screws and 1/4” x 1-1/4” keyway	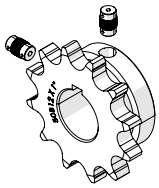
4 x 3/8” bolt, hex nut, lock washer and flat washer	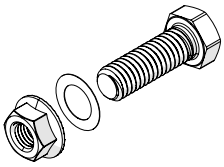
29.5’ hand chain & connecting link (Model MCX-H/MCX-GH)	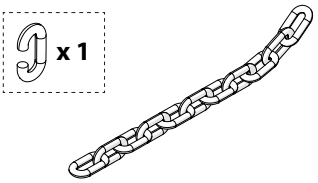
1 x Warning Sign	
1 set of Nice photocells (supplied with all operators)	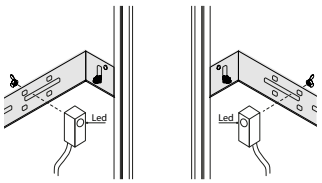

4 MCX-J, MCX-H AND MCX-GH SPECIFICATIONS

MCX-J, **MCX-H**, and **MCX-GH** heavy-duty jackshaft operators are designed for commercial and industrial high lift, vertical lift, rolling doors and rolling grilles provided that doors are driven by a drive shaft. **MCX-H** and **MCX-GH** operators incorporate a chain hoist for manual operation of the door. All models are shown in ***Figure 1*** (**MCX-J**, **MCX-H**, and **MCX-GH**).

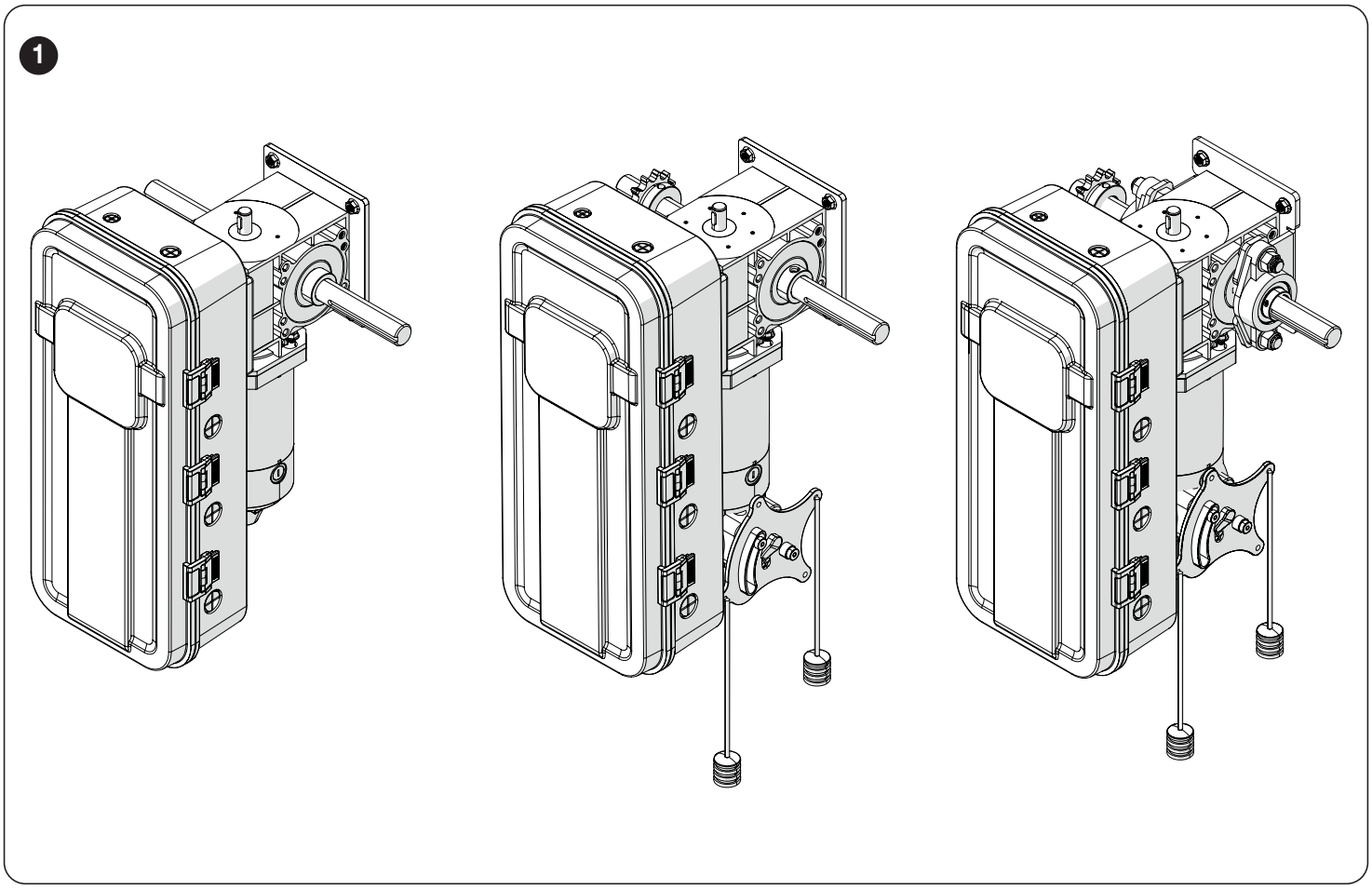

Table 6

Specification	Description
Standard Operator Weight	45-55 LBS
Motor	Continuous duty industrial type 90V DC motor, 1/2HP and 1HP
Operator Voltage	120V-240V 1PH/3PH (Optional dual voltage transformer 480/600V - MV00540)
Output Shaft Speed	57 RPM
Emergency Disconnect	Floor level cable disconnect system with electrical cut-out features allows person to manually operate the door by hand (**MCX-J**) or by chain hoist (**MCX-H** and **MCX-GH**) in case of emergency.
Brake (Optional)	Electro-mechanical spring brake to prevent coasting and maintain door position. (MV00541)
Wall Mount Plates	MM00645 & MM00651

5 OPERATOR DIMENSIONS

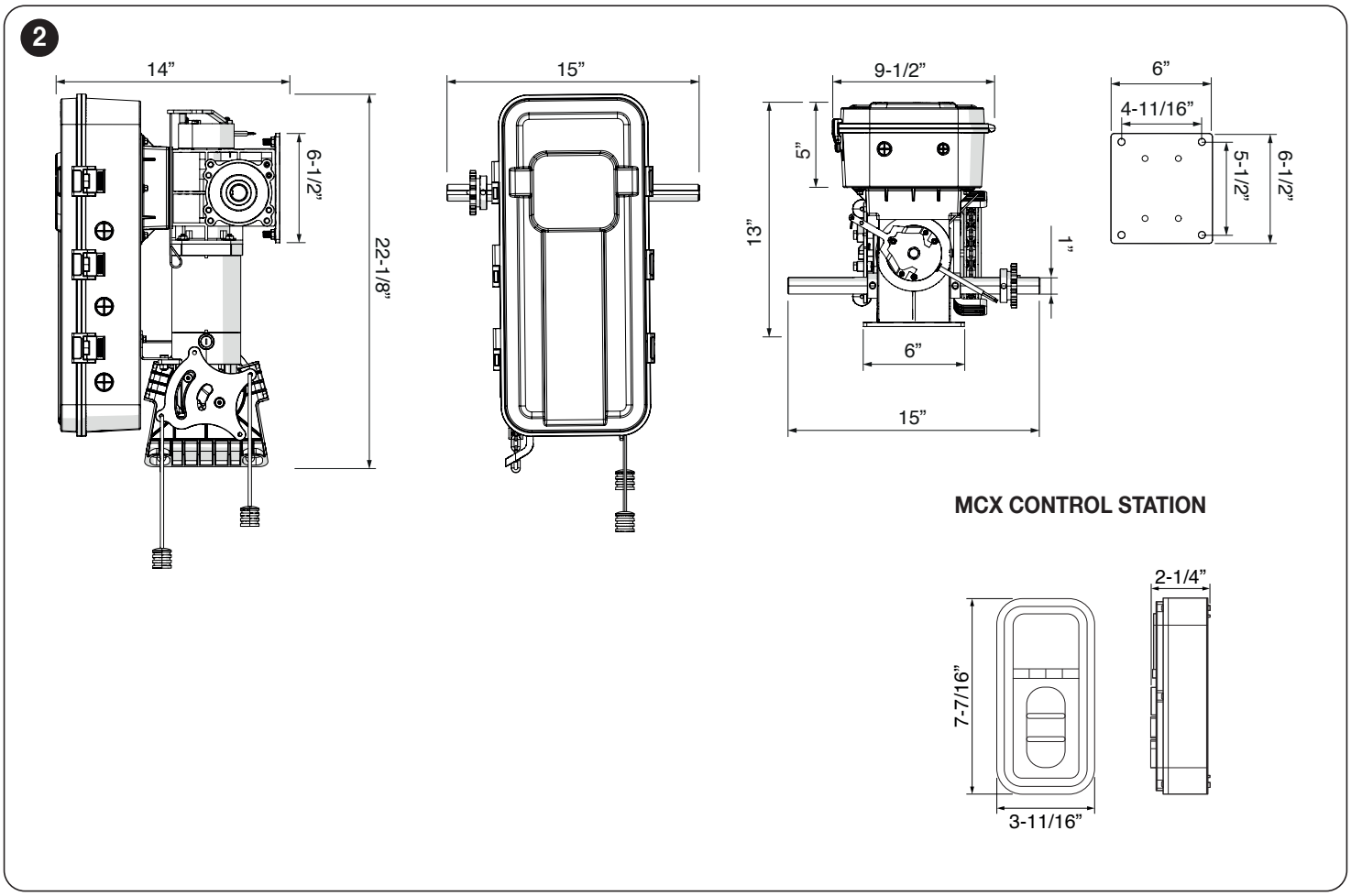

Wall mount plate dimensions (optional).

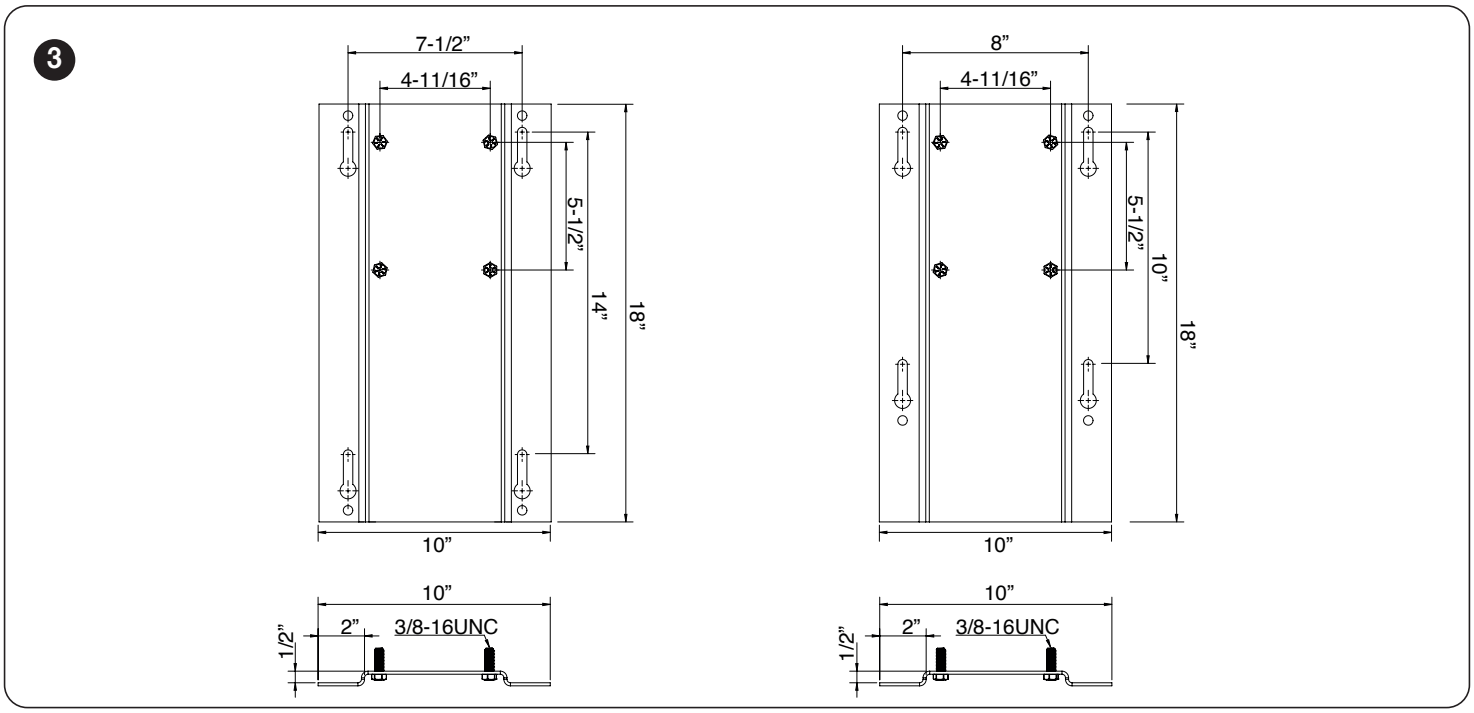

MM00651
Designed for easy retrofit of Pro-H and Pro-J

MM00645
Designed for easy retrofit of Pro-GH

PLEASE NOTE: Either wall mount plate is compatible with all Nice MCX operators.

6 IMPORTANT SAFETY INSTRUCTIONS

WARNING! To reduce the risk of injury or death:

READ AND FOLLOW ALL INSTRUCTIONS:

- Never allow children to operate or play with door controls. Keep the remote control (where provided) away from children.
- Personnel should keep away from a door in motion and keep the moving door in sight until it is completely closed or opened. **No one should cross the path of a moving door.**
- Test the door's safety features at least once a month. After adjusting the limit of travel, retest the door operator's safety features. Failure to adjust the operator properly may cause severe injury or death.
- For products having a manual release, if possible, use the manual release only when the door is closed. Use caution when using this release when the door is open. Weak or broken springs may cause the door to fall rapidly, causing severe injury or death.
- **Keep doors properly operating and balanced.** See Door Manufacturer's Owner's Manual. An improperly operating or balanced door could cause severe injury or death. Have trained door systems technicians make repairs to cables, spring assemblies, and other hardware.
- Press the **"OPEN"** device or use emergency disconnect mechanism if a person is trapped under the door.
- **Save these instructions.** The owner or users must understand the safety and operation of door system. Ensure that this installation manual is located close to the door system.

7 IMPORTANT INSTALLATION INSTRUCTIONS

READ AND FOLLOW ALL INSTALLATION INSTRUCTIONS:

- Commercial door operators are never to be installed on a residential installation.
- Install only on a properly operating and balanced door. A door that is operating improperly could cause severe injury. Have qualified service personnel make repairs to cables, spring assemblies, and other hardware before installing the operator.
- Remove all pull ropes. Remove or disable all locks connected to the door before installing the operator, unless the locks are mechanically or electrically interlocked to the power unit.
- Install the door operator at least 8 feet or more above the floor if the operator has exposed moving parts.
- Do not connect the operator to the source of power until you are instructed to do so.
- Locate the control station: (a) within sight of the door, (b) at a minimum height of 5 feet so that small children cannot reach it, and (c) away from all moving parts of the door.
- Install the Entrapment Warning Placard next to the control station in a prominent location.
- For products having a manual release, instruct the end user on the operation of the manual release.
- Install non-contact entrapment protection devices (photocells) and/or contact entrapment protection devices (reversing edges).

PLEASE NOTE: photocells should be installed at no more than 6" from the floor. Edges should be installed on the leading edge of the door.

PLEASE NOTE:

- Installation of operator must be done by a qualified installer. Door must be properly installed and working smoothly. Remove all door locks prior to installation.
- The **MCX-J**, **MCX-H** and **MCX-GH** operators have dual output shafts and may be mounted on left (standard) or right-hand side of door. If handing of operator must be reversed, loosen set screws, remove drive sprocket and keyway and install on opposite side of drive shaft. The chain hoist can also be switched from right to left, and vice versa.

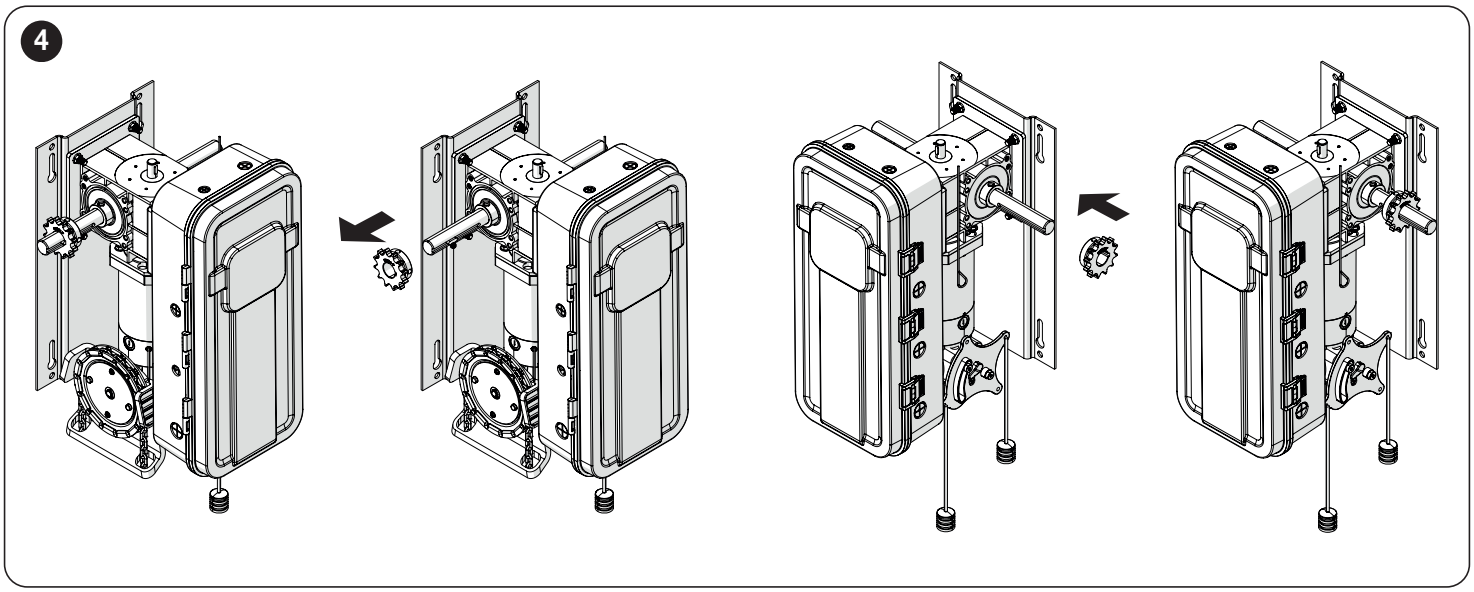

The **MCX-H** and **MCX-GH** operators include a built-in chain hoist. Depending on the installation, if the chain hoist handing is not set correctly, the hand chain may hang into the door opening. If this occurs, the chain hoist orientation can be reversed.

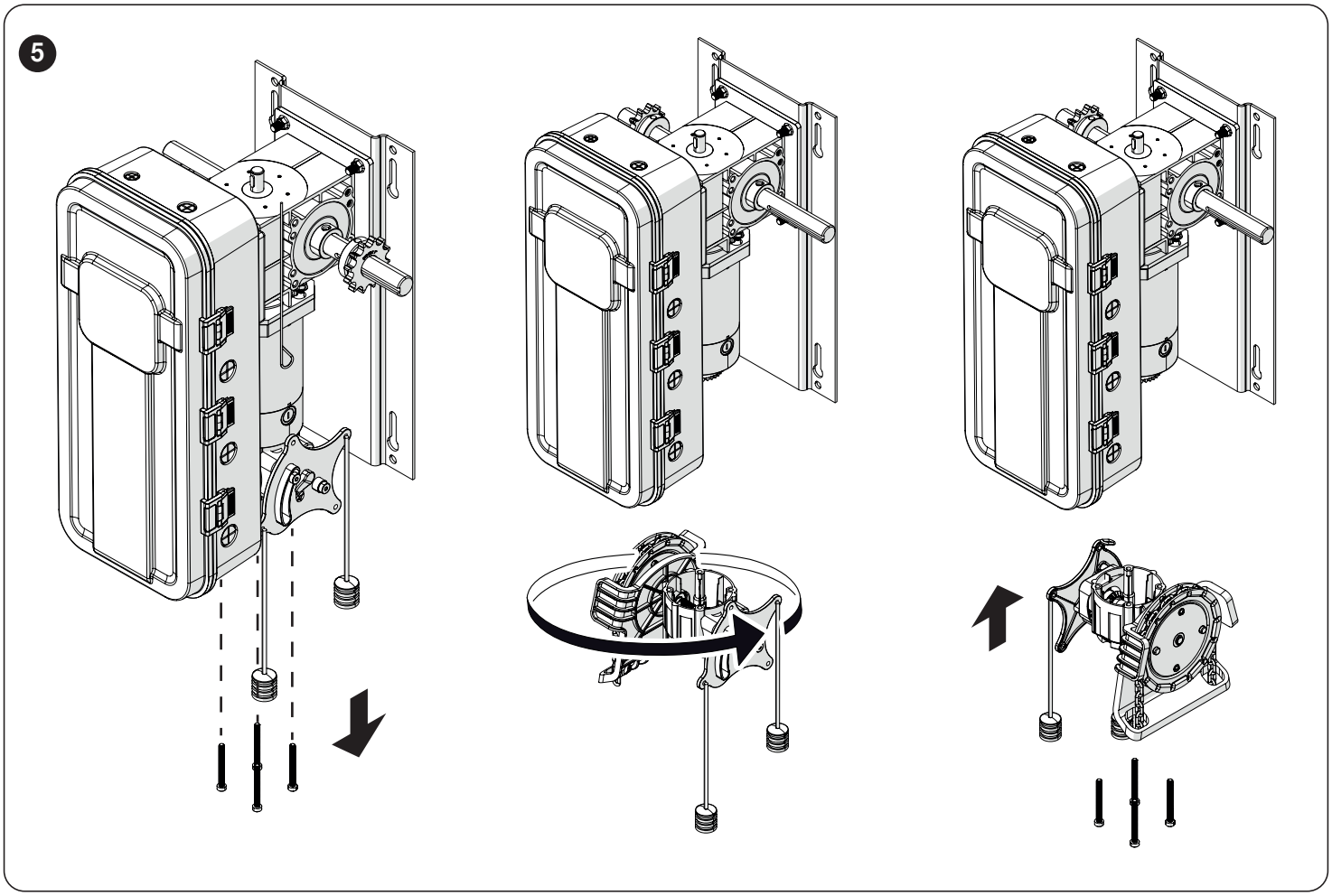

8.1 BRAKE KIT INSTALLATION (MV00541 OR MV00543)

To install an optional electro-mechanical brake, follow the steps below. Brake should be installed before operator is installed, and can be installed with left or right orientation depending on operator installation. If more detail is needed, please refer to the instruction (MN00283) included with the brake assembly.

1. Using circlip pliers, open one of the retaining rings (A) and seat it in the groove on the shaft (B).

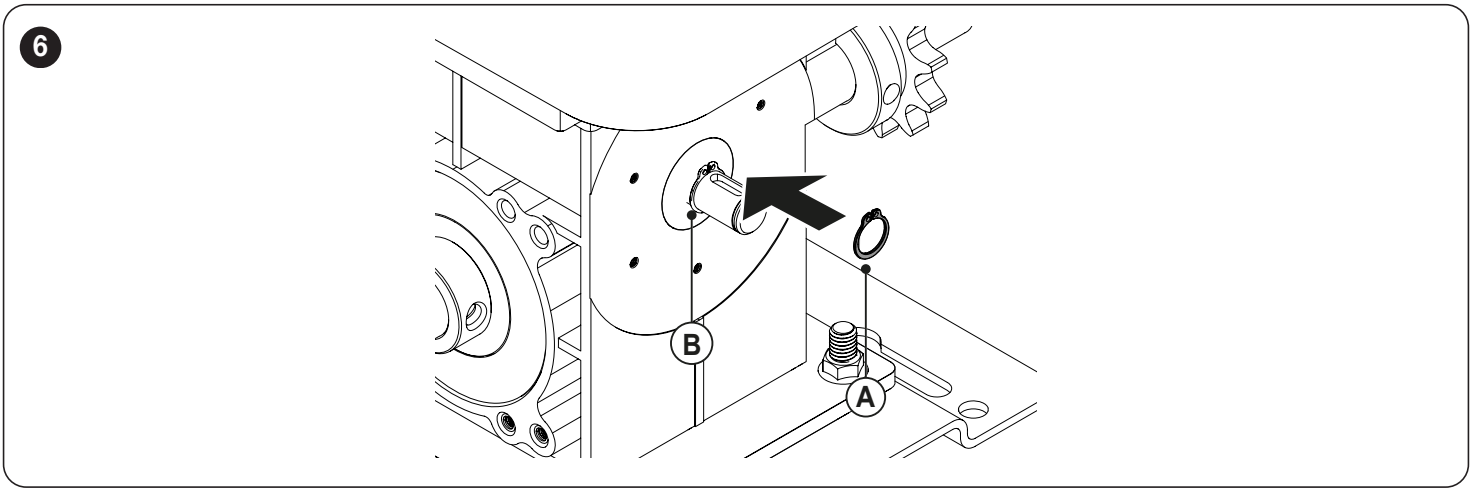

2. Insert keyway (C) into the shaft groove, then slide the brake gear (D) onto the shaft (ensure correct orientation of the brake gear). Install the second retaining ring (E) onto the shaft to secure the brake gear.

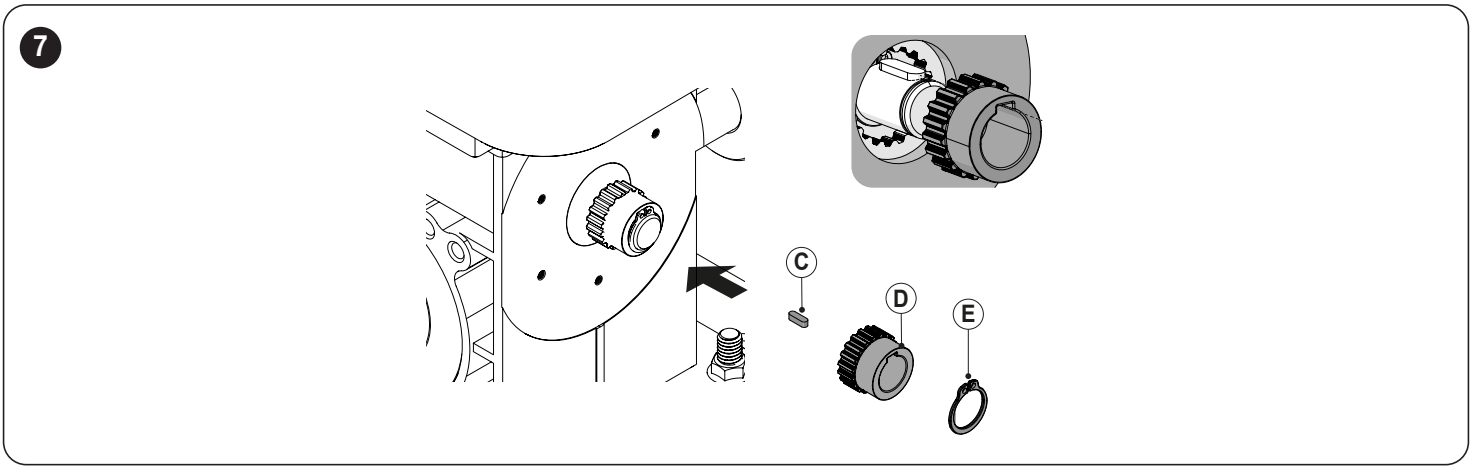

3. Install the mounting plate (F) and the friction plate (G) (both part of brake assembly). Make sure that mounting plate is flush against gearbox housing.

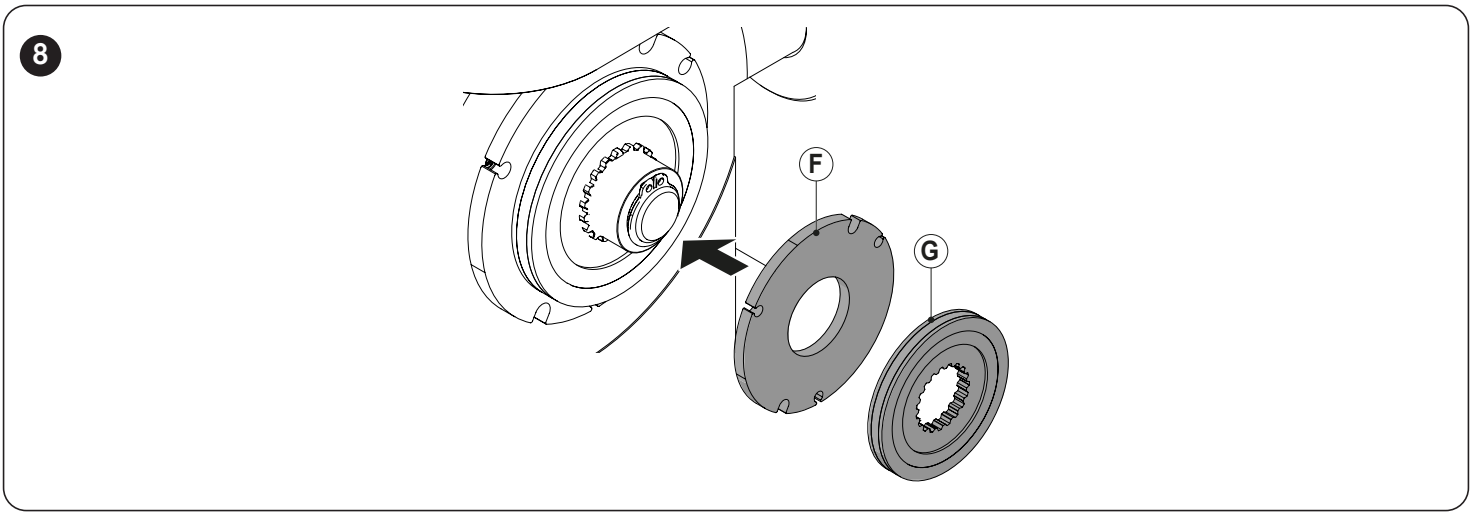

4. Slide the brake assembly (H) onto the shaft over the friction plate and brake gear. Secure the brake assembly using screws (I) and washers (J). Torque screws to 3 Nm (2.2 ft-lbs).

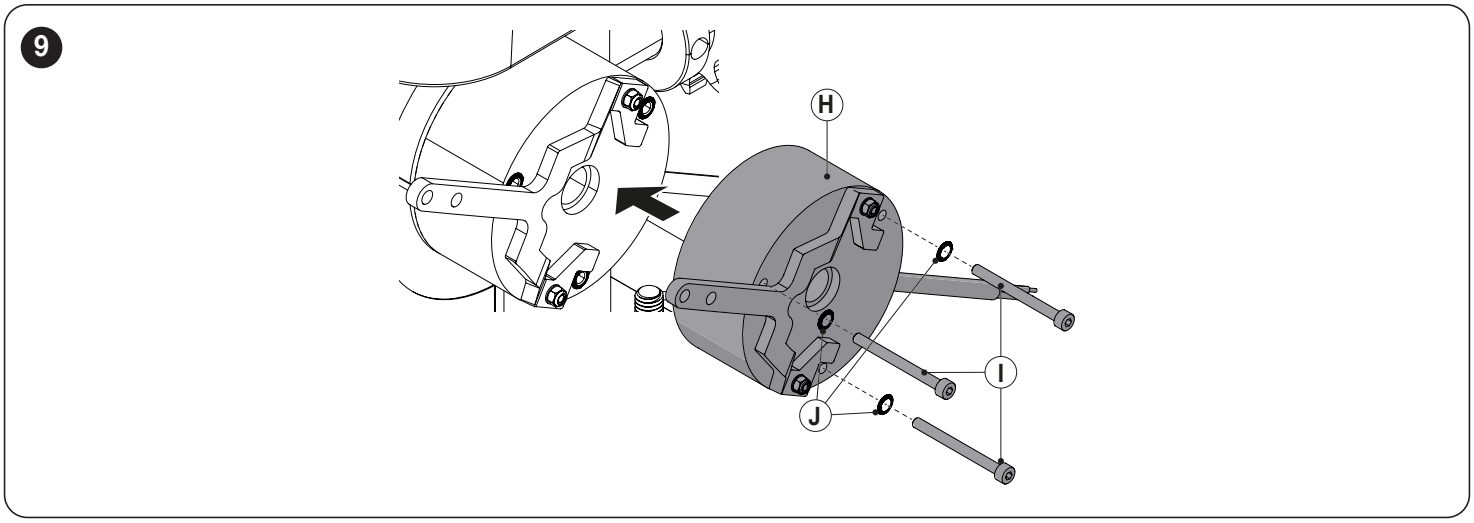

5. Connect the sash chain assembly (L) to the brake lever with included key ring, and secure the chain in the chain keeper (M) (not included with kit) at floor level.

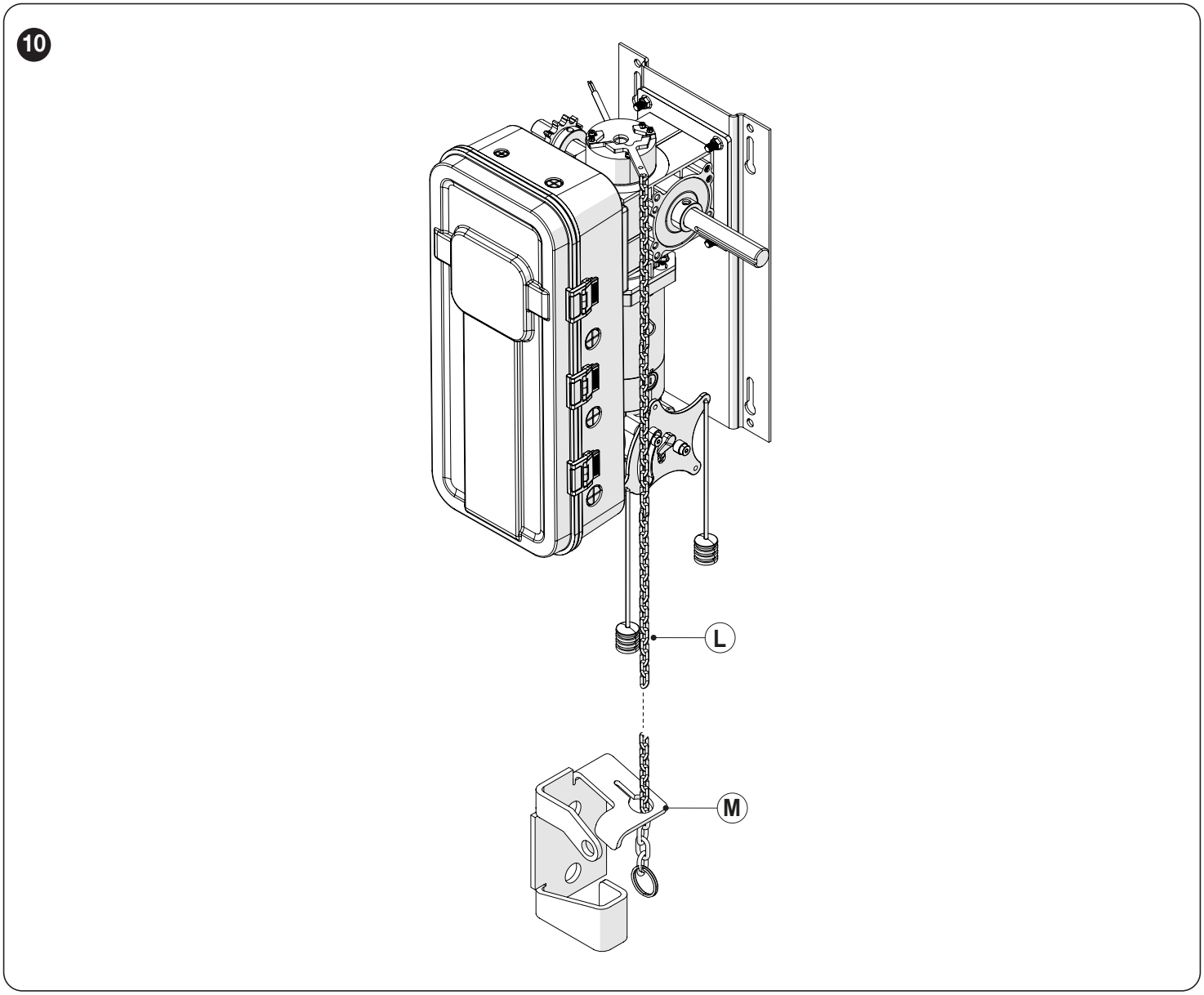

8.2 MCX CONTROL STATION INSTALLATION

1. Install control station away from all moving door parts, within sight of the door and a minimum of 5 ft from the ground.
2. Install entrapment warning sign next to control station.

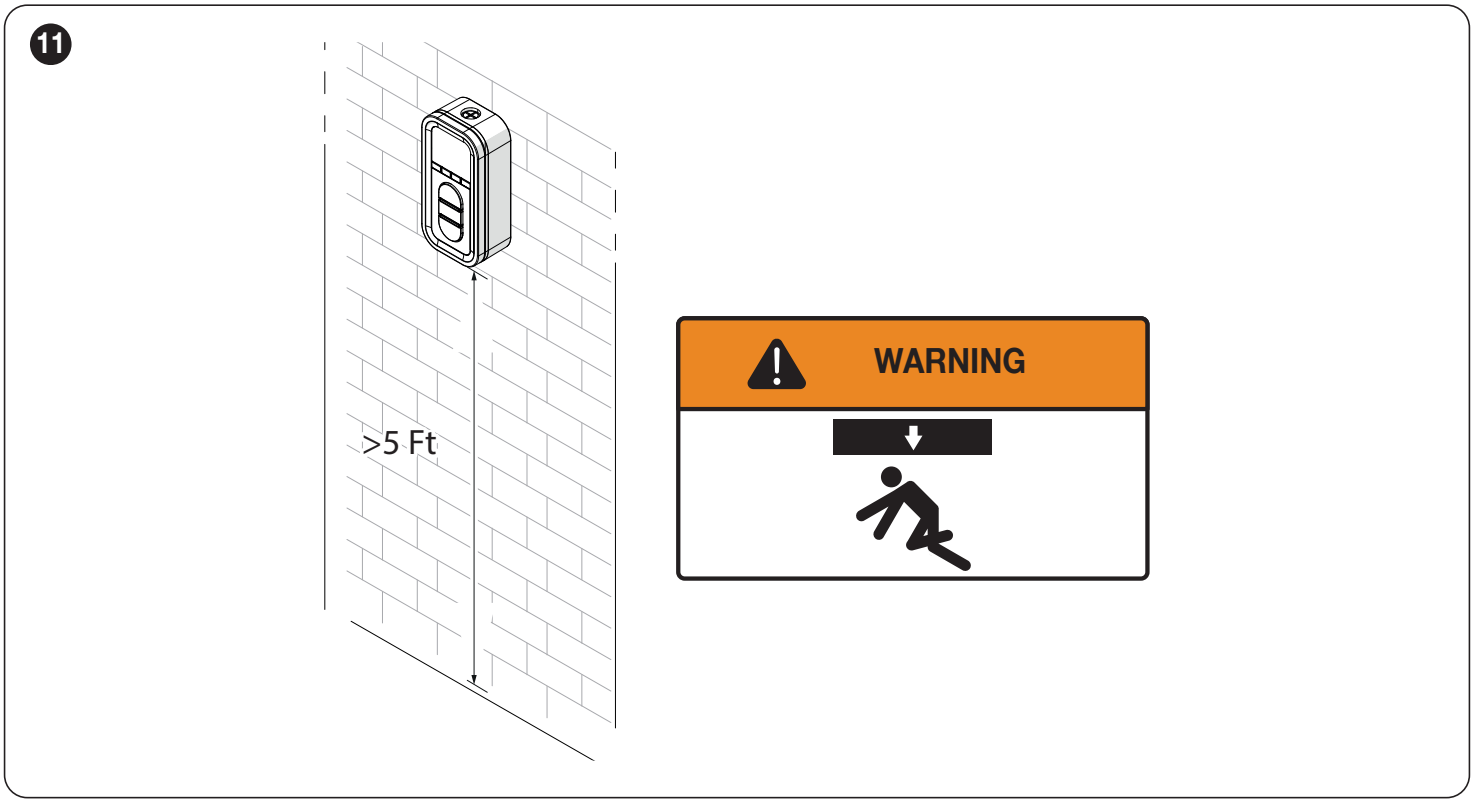

8.3 OPERATOR INSTALLATION

1. As a general rule, the door operator should be installed below the drive shaft and as close to the door as possible. The ideal distance between the operator drive shaft and the door shaft is approximately 12” to 15”. The operator may be wall/bench mounted or bracket/shelf mounted. These two mounting configurations are shown below:

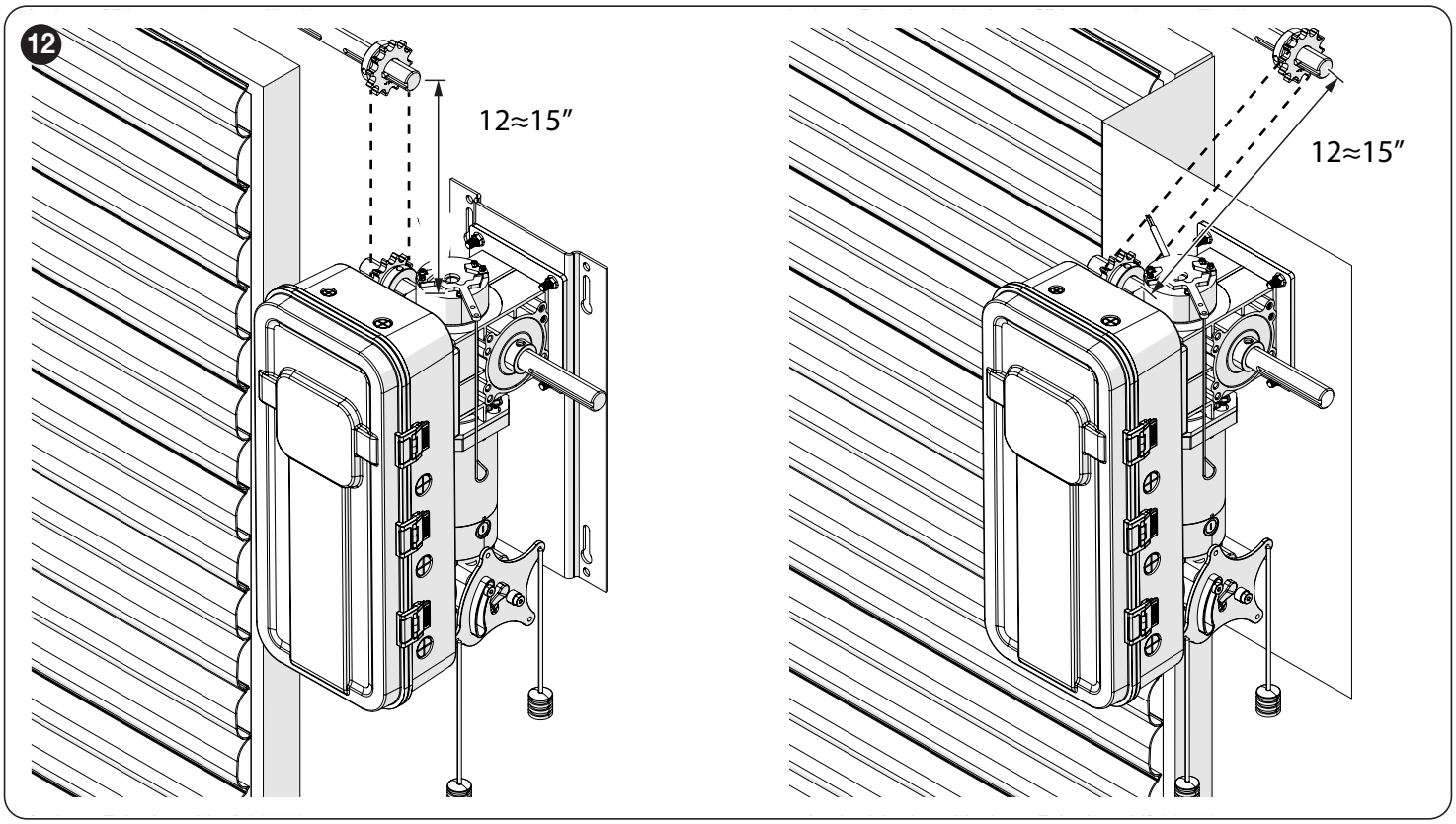

2. Mount the operator to the wall, hood or bench with 3/8” bolts, nuts and washers provided or with lag bolts and shields if installation requires it. Make sure that operator is secured but do not tighten bolts.
3. Place door sprocket on door shaft and align with operator drive sprocket but do not insert keyway or set screws.
4. If an optional chain spreader has been ordered with your operator, install as shown below:

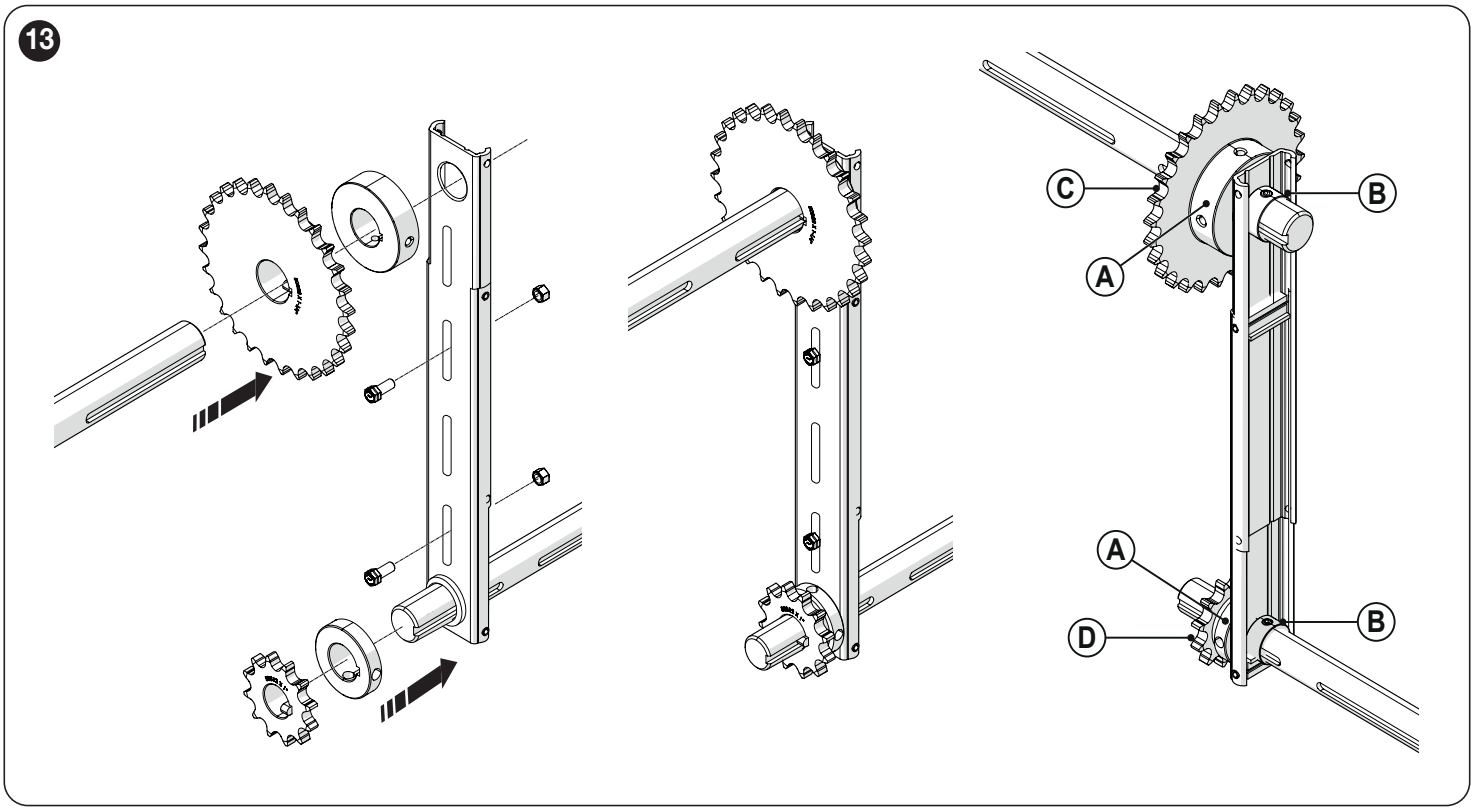

A. Flange Bearing
B. Collar
C. Door Sprocket
D. Operator Sprocket

5. Install drive chain over sprockets.
6. Lower or raise operator to adjust chain tension so that there is no more than 1/4” chain slack between sprockets. Tighten operator mounting bolts.
7. Carefully re-align sprockets, if necessary and secure keyway and set screws.

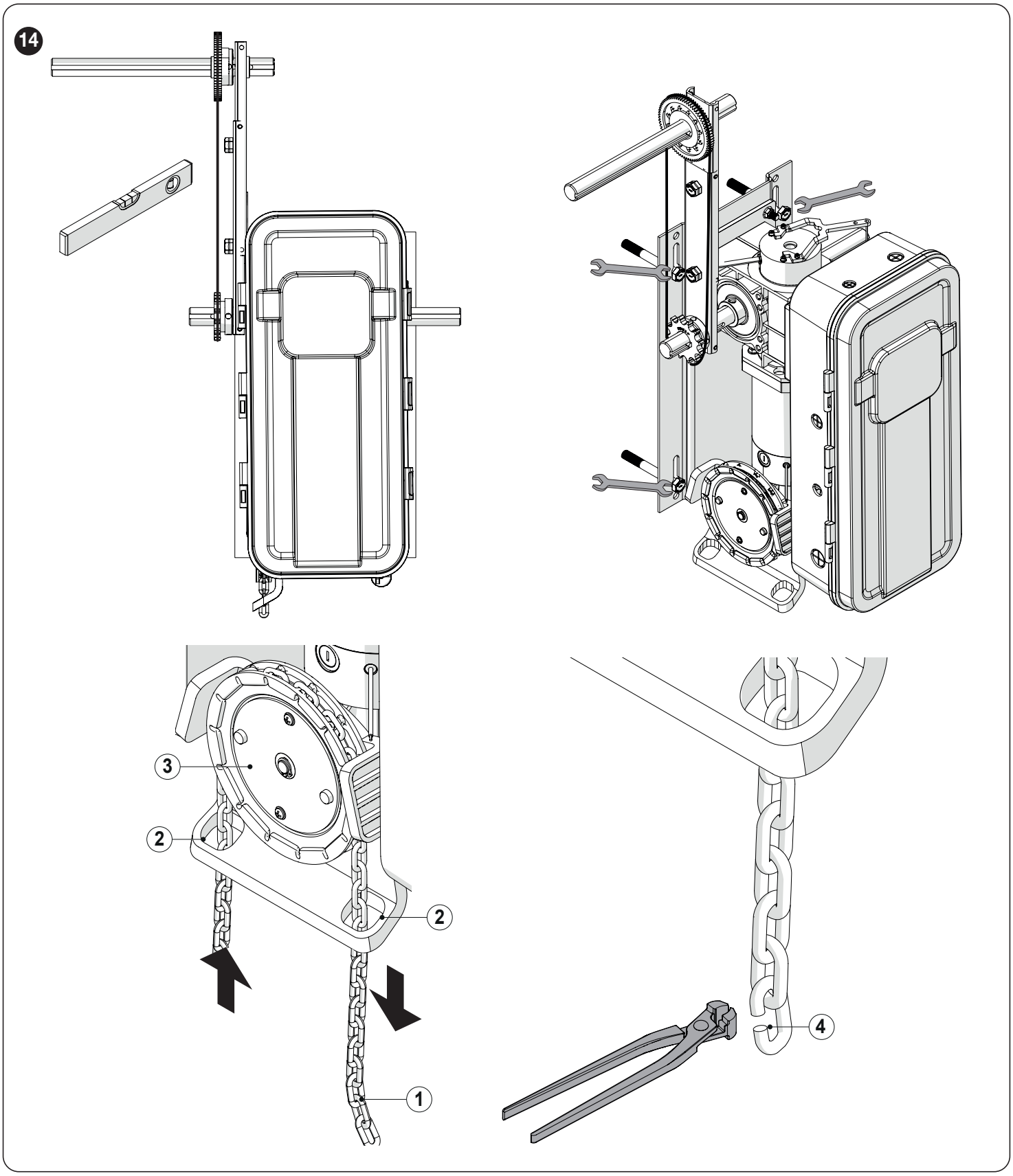

For MCX-H and MCX-GH models:
Cut hand chain so it hangs 2–3 ft above the floor once installed. To determine the correct length, double the door height and subtract 4 ft (e.g., for a 14 ft door: 14 × 2 – 4 = 24 ft).

Feed the hand chain (1) through the chain guard (2) and wrap it around the pocket wheel (3). Connect both ends of the chain using the supplied connecting link (4).

If the door height requires more than the included 29.5 ft of chain, additional chain packs (MR00057) can be added as needed.

9 ELECTRICAL CONNECTIONS

Before connecting power or the control station, refer to the wiring diagram on the inside of the control box cover and in Appendix IV of this manual.

Each individual commercial door operator must have its own dedicated power supply.

Nice highly recommends that each individual commercial door operator have an external circuit breaker or fused disconnect.

WARNING! Compare available power supply voltage to operator nameplate prior to electrical connection. Failure to connect appropriate power supply voltage may cause serious damage to operator.

To reduce the risk of injury or death:

- all electrical connections should be made by a qualified service person
- do not attempt to make electrical connections to operator unless power supply has been disconnected at fuse box.
- operator must be connected in accordance with local electrical codes and grounded to ground terminal located inside control box.

WARNING! Whenever two or more wires need to be inserted into the same terminal slot, we recommend using a ferrule to secure the wires together before insertion. This helps ensure a solid, stable, and reliable connection.

10 CONNECTION OF POWER SUPPLY AND MCX CONTROL STATION

10.1 OPERATOR ELECTRICAL CONNECTIONS AND START-UP INSTRUCTIONS

Important: Follow these steps carefully and in the order shown:

10.1.1 CONNECT POWER SUPPLY

Access the contacts of the main board as shown:

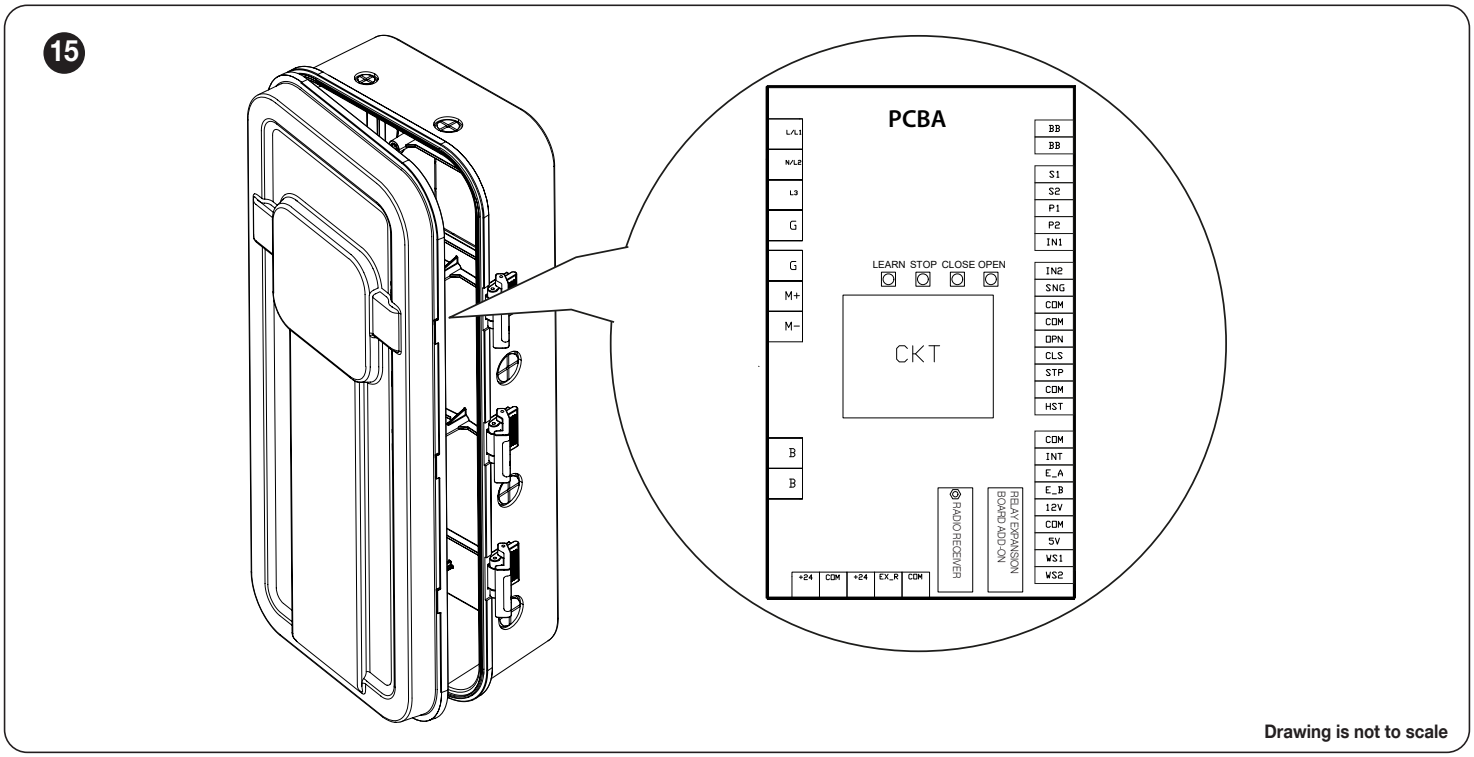

POWER WIRING: Use 1/2” NPT (7/8” diameter) holes for all power wiring.

Single-Phase (120-240 VAC): Connect single phase power supply to terminals L and N.

Three-phase (208-240 VAC): Connect 3-phase power supply to terminals L1, L2 and L3.

Three-phase (480/600 VAC): Connect 3-phase power supply to the transformer terminals as shown in the diagrams below. Connect the blue transformer wire to L1 and the black transformer wire to L2.

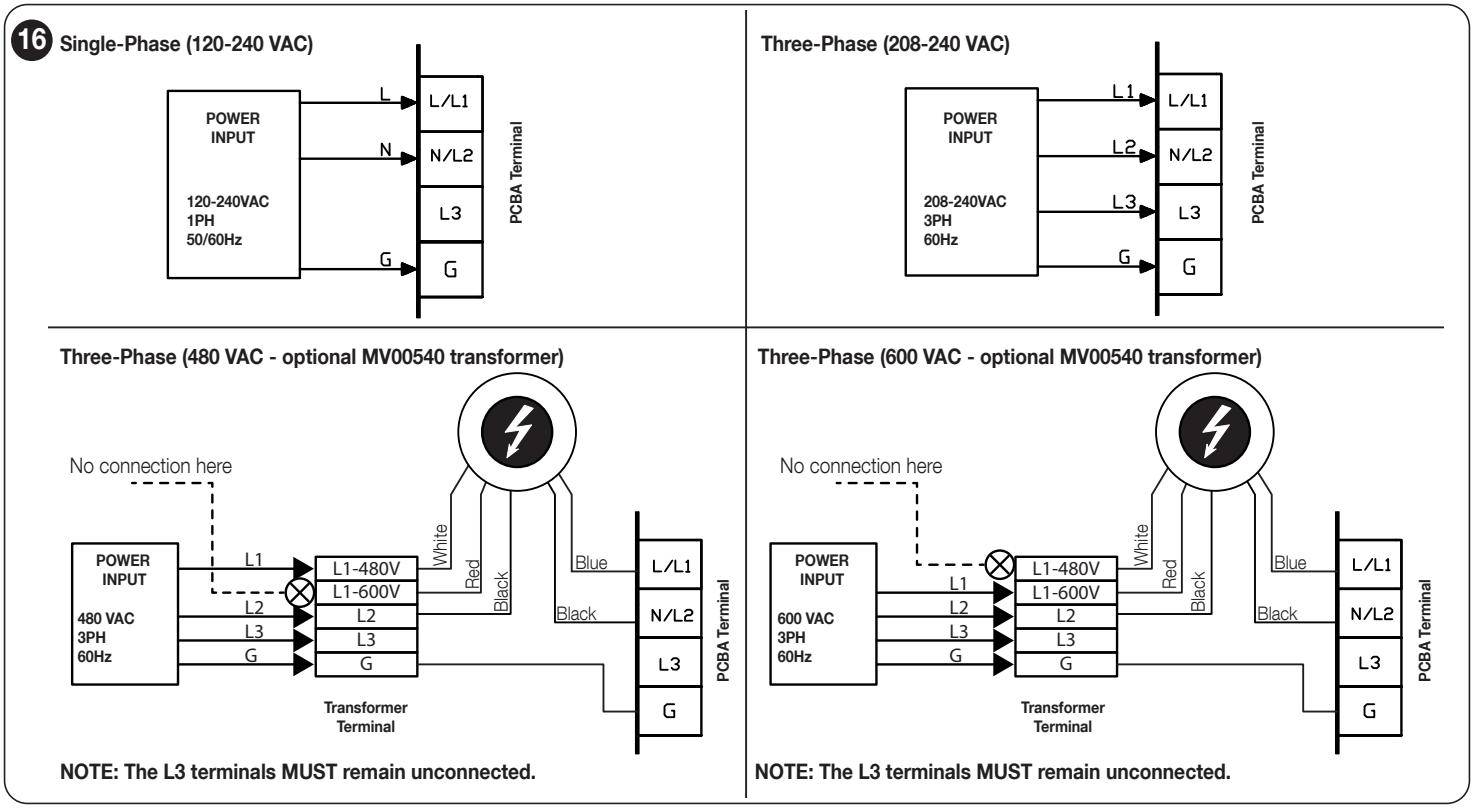

10.1.2 CONNECT WALL STATION (REQUIRED)

NOTE: Do not run control wires and power wires in same conduit.

Access the contacts of the wall station as shown:
- loosen six screws (1) to access the wall station contacts on reverse (2)

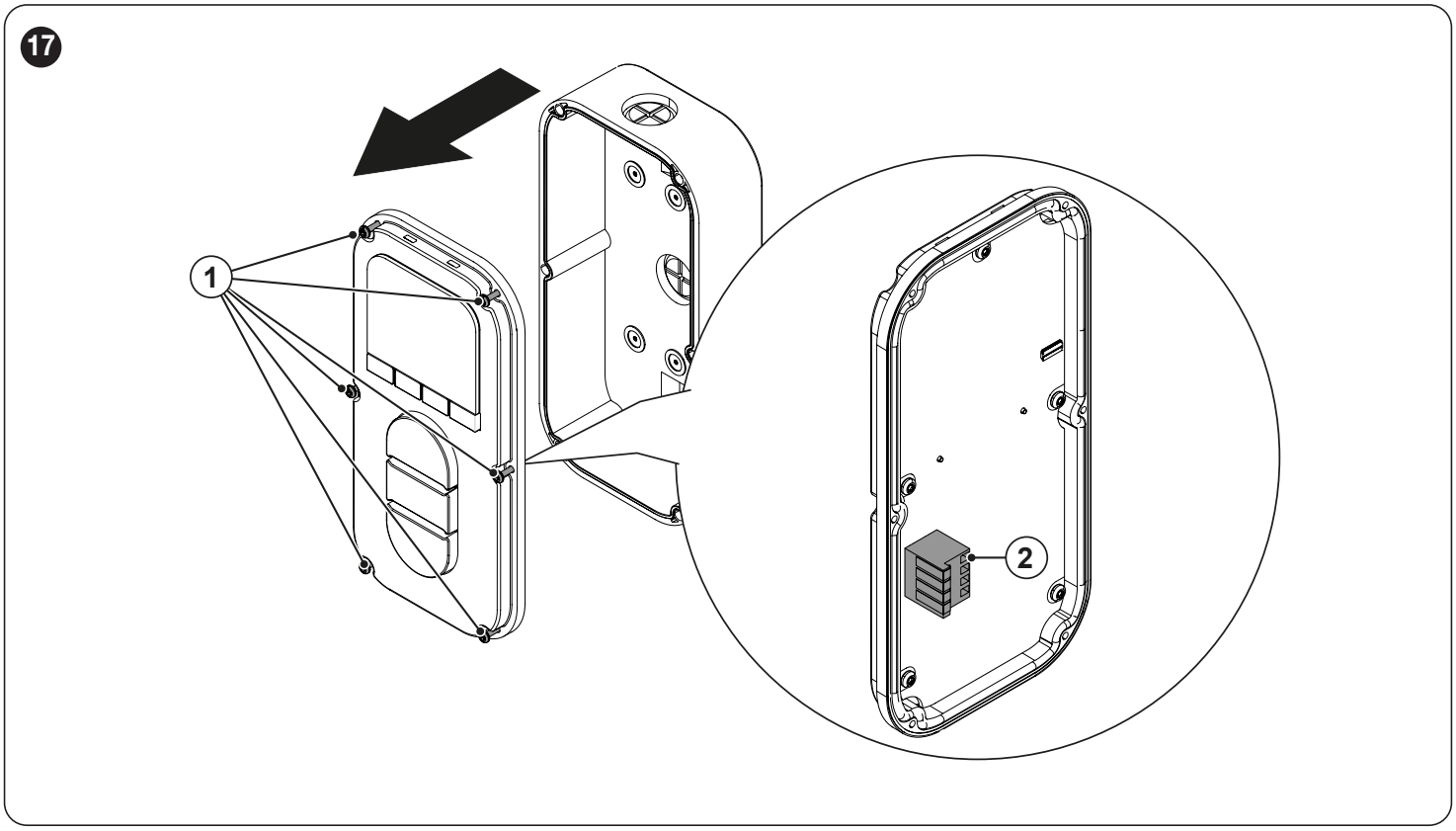

- Using 16–22 AWG twisted-pair wire, connect each wall station terminal (COM, 5V, WS1, WS2) to the matching terminal on the main board.

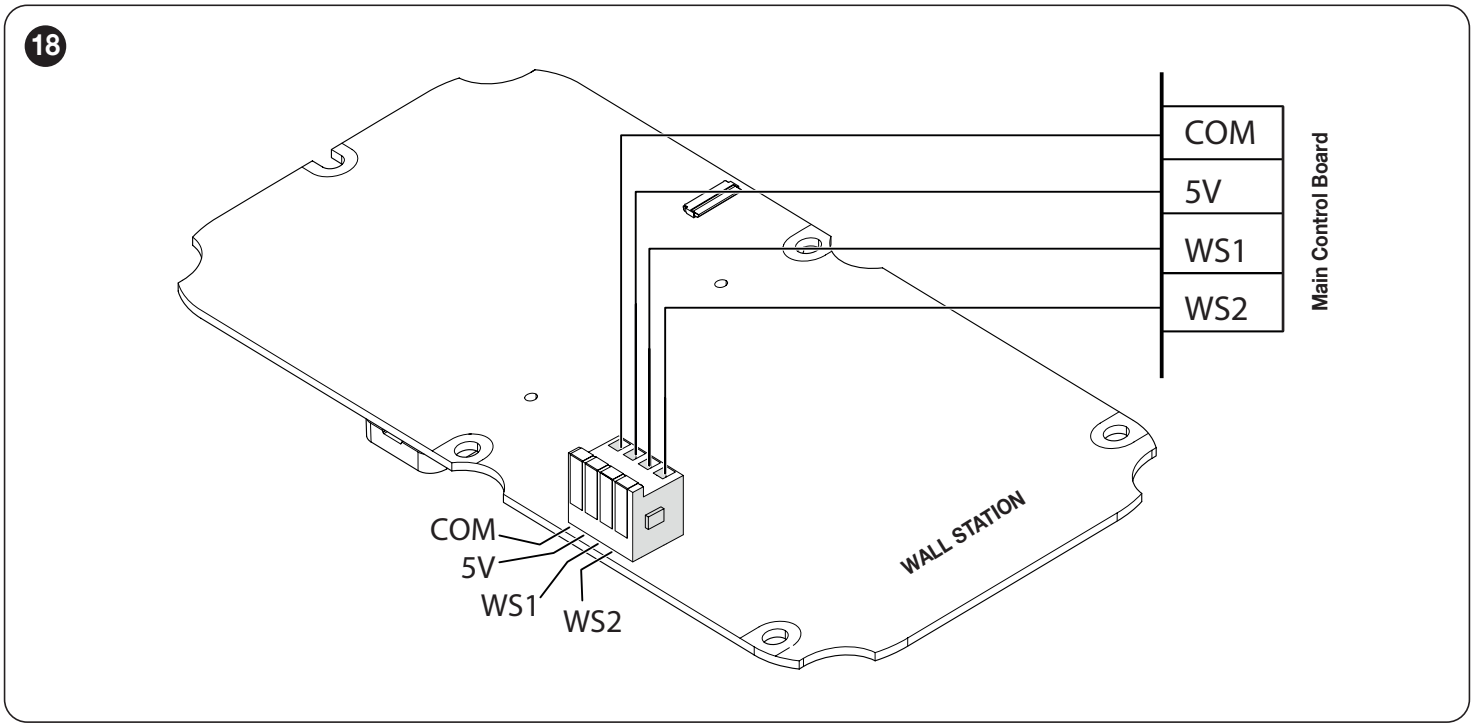

10.1.3 CONNECT SAFETY DEVICES

Connect safety devices to the main board as follows:
BlueBus photo eyes: Wire to terminals BB and BB.
Pulsed-output photo eyes: Wire to terminals P1 and P2 (one pair maximum).
10 kΩ resistive safety devices: Wire to terminals S1 and S2 (one device maximum).

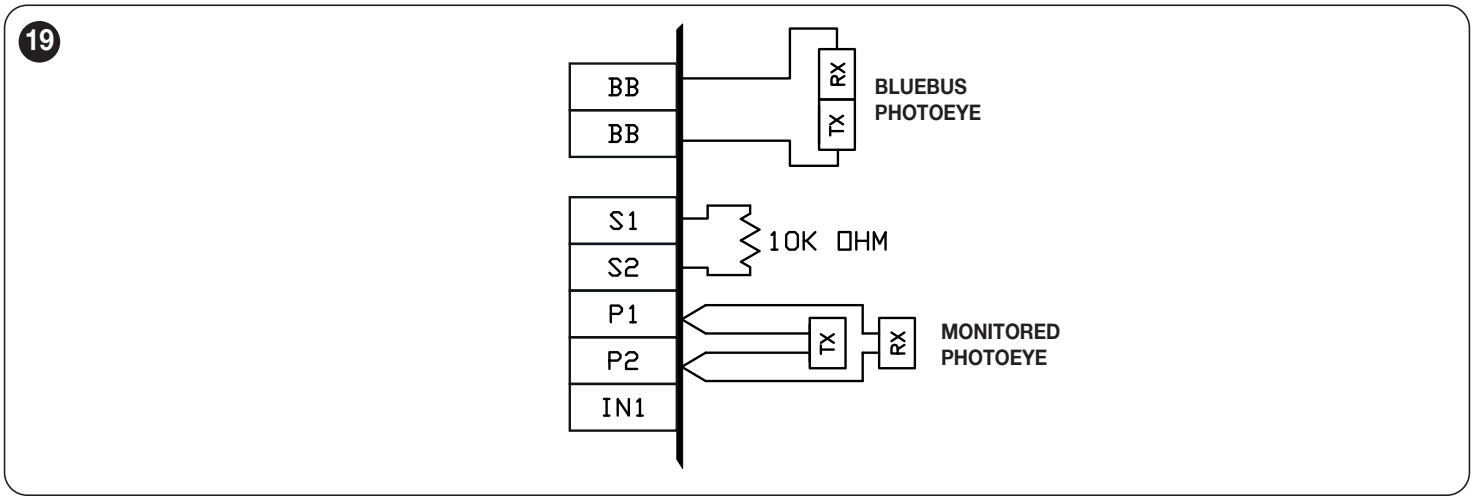

IMPORTANT! Monitored safety devices must be connected if momentary activation on close required.

Monitored safety devices:
At least one pair of Nice monitored photo eyes, or Nice compatible monitored safety device must be connected and enabled. If not connected, door can only be opened and closed by constant pressure on the open or close push buttons. If constant pressure on close push button is removed before door reaches full closed position, then door reverses to full open.

PLEASE NOTE: Only one pulsed monitored safety device can be connected across terminals P1 and P2.

One 10k monitored safety device can be connected to terminals S1 and S2. See section 12 for complete installation instructions for the Nice BlueBus or Nice compatible photo eyes.

10.1.4 WIRE ELECTRIC EDGE CONNECTION

A standard 2-wire or 4-wire electric edge or photoeye can be connected across S1 and S2 terminals as a monitored safety device.

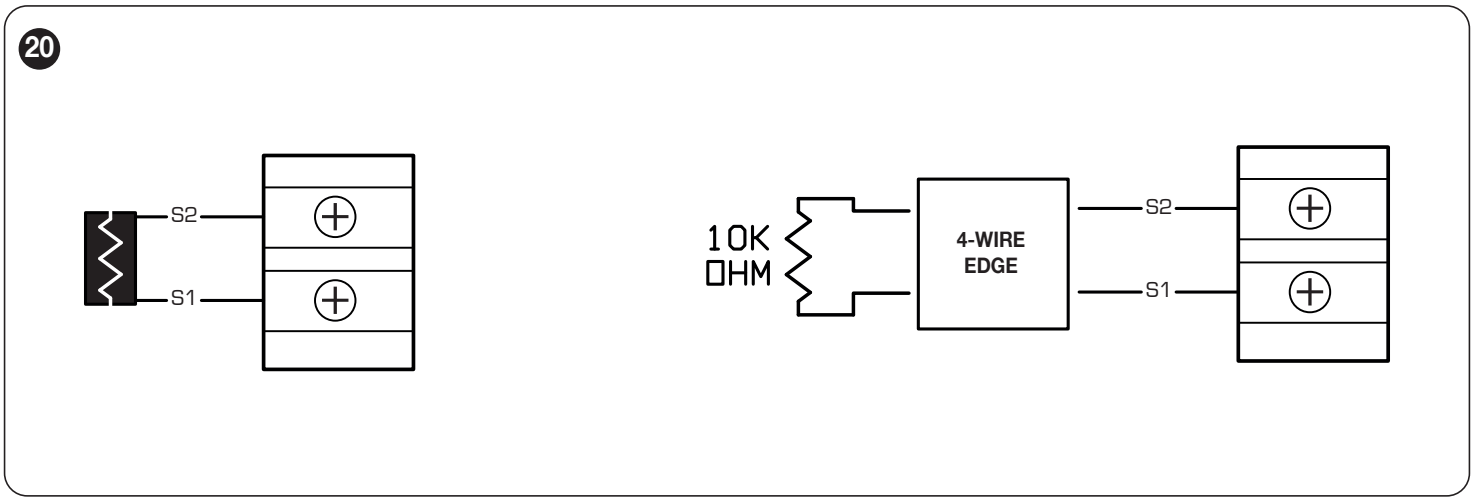

10.1.5 ON BOARD O/C/S/L PBS INSTRUCTIONS

On-board Open, Close, Stop and Learn buttons are provided directly on the board for troubleshooting purposes. In order to operate unit by on-board Open, Close, Stop, Learn buttons, the factory installed jumper (#1) between the COM and STOP terminals on the terminal strip must remain connected.

21

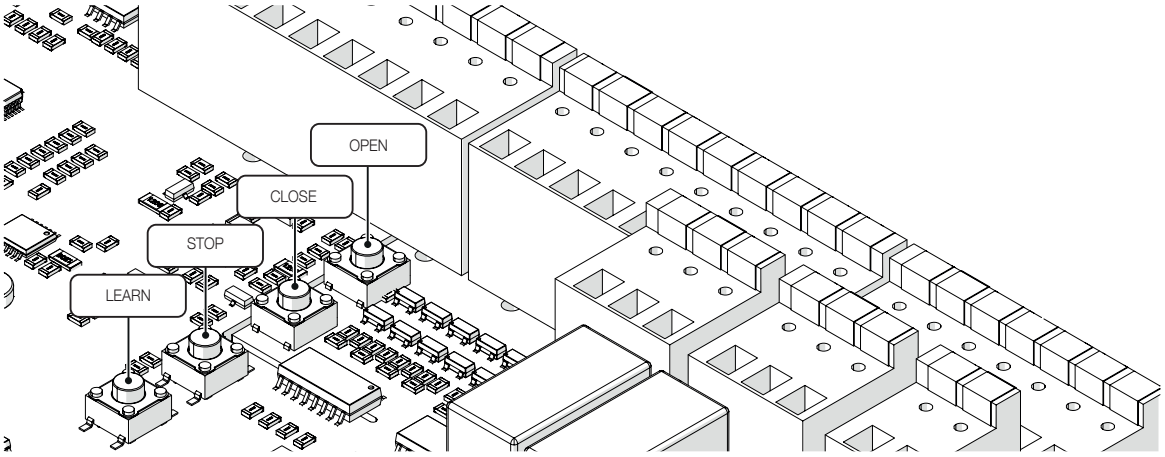

10.1.6 CONNECTION OF OPTIONAL EXTERNAL O/C/S PBS (MV00003)

Connect O/C/S PBS as shown in diagram.

PLEASE NOTE: Jumper #1 must be removed after the external O/C/S PBS has been installed.

22

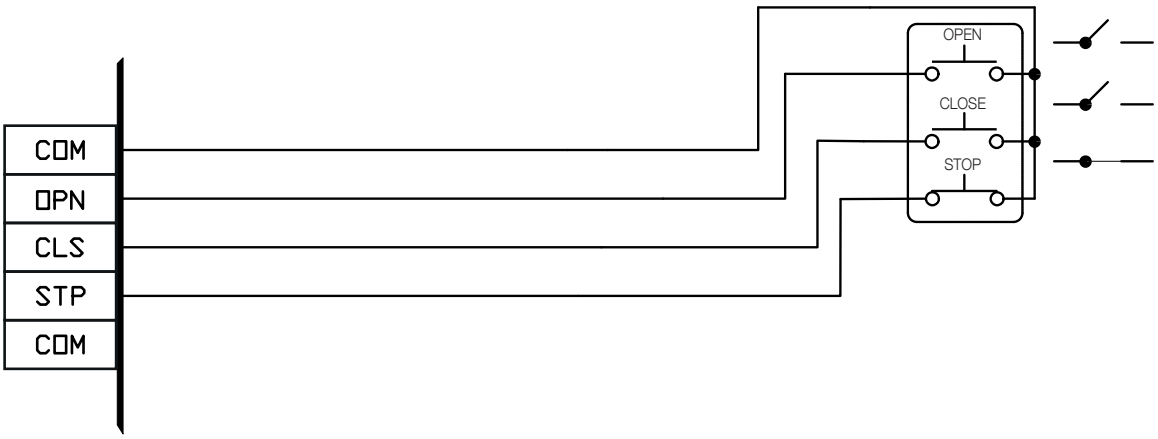

10.1.7 CONNECTION OF OPTIONAL EXTERNAL SINGLE-BUTTON DEVICE (MV00001)

Connect an external single-button as shown in diagram. Please refer to “Modes of Operation” for the functionality of single button.

23

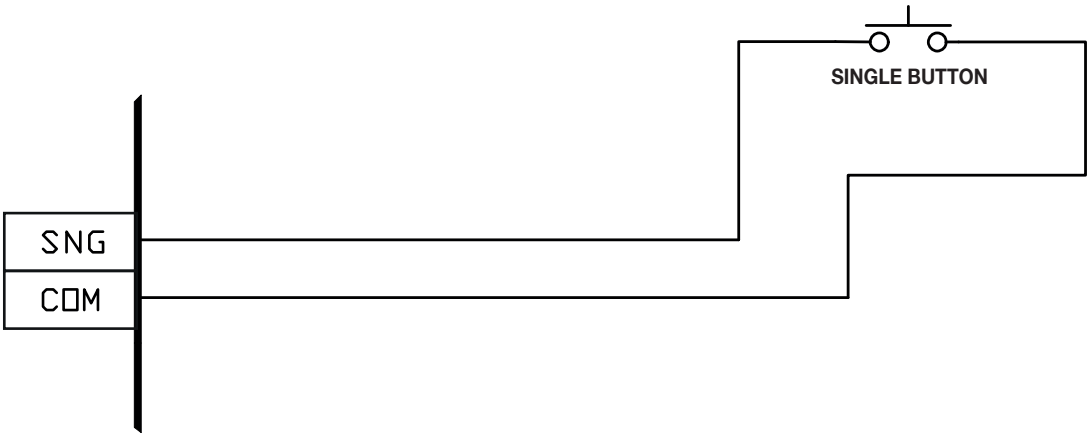

10.1.8 24 VOLT POWER:

Wire to terminal +24 and COM.

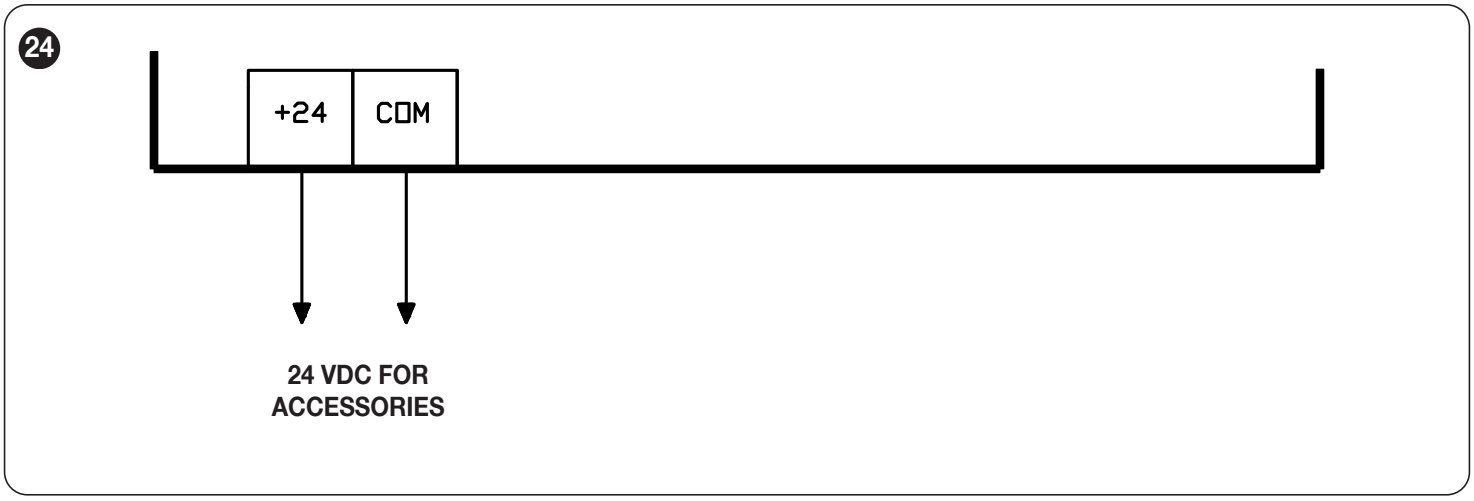

11 PROGRAMMING INSTRUCTIONS

11.1 INSTALL & SETUP PIN

Install & Setup PIN: 1380.

11.2 MCX CONTROL STATION

The MCX Control Station is used for all installation setup and provides full control of all operator functions.

25

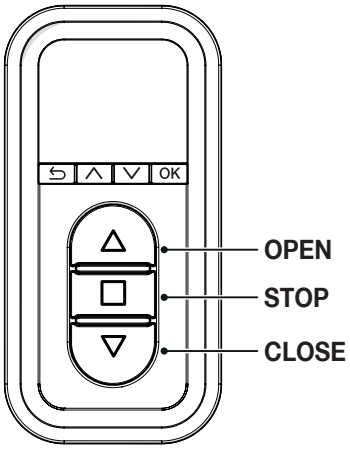

26

HORIZONTAL NAVIGATION BUTTONS

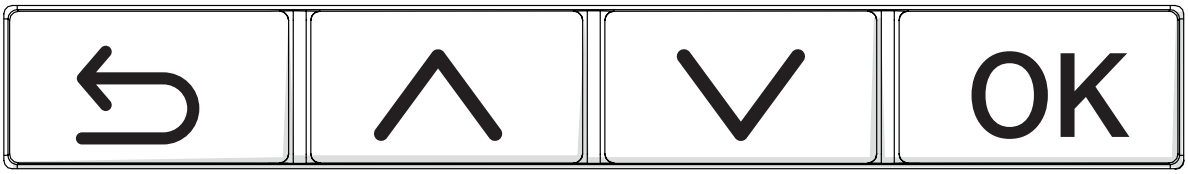

RETURN | UP / + | DOWN / - | CONFIRM

Once powered up, the Home Page appears.
Press any horizontal navigation button to navigate to the Main Menu.
Navigation Controls:

Up ∧ **/ Down** ∨**:** Scroll through menu items.
OK: Confirm selection.
Return ⮌**:** Return to the previous screen.
Hold return: Return to Home Page.

11.3 MENU TREE

27

Install & Setup PIN: 1380	Language	- English - French - Spanish
	Limit Setup	
	Mode of Operation	- B2 - C2 - D1 - E2 - T - TS
	Operational Settings	- Timer to Close - Mid-Stop - Delay on Close - Run Timer
	Door Speed	- Adjust Open Speed - Adjust Close Speed
	Wireless Configuration	- Set Up - Enable/Disable - Lock
	Learn/Erase Transmitters	- Learn - Erase - Erase All Transmitters
	Input/Output Status	- Check INPUT - Check OUTPUT
	Usage Statistics	- Total Number of Cycle - Average Cycles/Day - Motor Run Time - Fault Count - Fault Count Last 30 Days - High Load Events - Safety Sensor Interruptions - Thermal Limit Activation - Cycle count(last 9 hours) - Cycle count(last 24 hours)
	Maintenance Schedule	- Cycle Until Next Service - Cycle Since Last Service - Days Until Next Service - Last Service Date - Customize Schedule - Reset Schedule
	Enable/Disable Sensors	- BB/BB - BlueBus - S1/S2 - 10k Sensor - P1/P2 - Pulsed Sensor
	Configure IN1/IN2	- IN1 - IN2
	Security	- Change PIN
	Factory Reset	
Settings	Operational Settings	- Timer to Close - Mid-Stop - Delay on Close - Run Timer
	Wireless Configuration	
	Language	- English - French - Spanish
	Date & Time	- Date - Time - Time Zone
Info & Diagnostic	Event Logs	
	Fault Logs	
	Usage Statistics	
	System Status	- Voltage INFO - Consumption INFO - Motor Drive Temperature
	Connectivity Check	
	Input/Output Status	
	Firmware Version	
	Hardware INFO	
	Update Firmware	- Control Station Firmware Version - Operator Firmware Version
	Transmitters Memory	- Transmitters ID List
	Maintenance Schedule	
	Door Position	
	Legal & Regulatory	

11.4 LANGUAGE SELECTION

This operator supports three language options: English, French, and Spanish. The currently selected language will be highlighted on the display. If no selection is made, English will be set as the default.
To change the language:

1. Go to **Settings > Language Selection**.
2. Select language.
3. Press **Ok** to confirm your selection.

11.5 FACTORY RESET

1. Go to **Install & Setup > Factory Reset**.
2. A prompt will appear:

“To reset the operator to factory default settings, please press the OK button.”

3. Another message will appear:

“Are you sure you want to reset operator to factory default settings? This can not be undone.”

4. If you press **Ok**, a confirmation message will appear:

“Reset successful.”

5. Upon successful reset, the system will automatically return to the Home screen.

11.6 NICE G.O. APP INSTALLATION

1. Download, Register, and Activate Application
   - Using an end-user’s smartphone or tablet, scan the **QR** code below to download the **Nice G.O. app**.
   - On first launch, select **Create Account** to register. Once registration is complete, sign in using the newly created account credentials.
2. Connect the Operator to the Nice G.O. app
   - Stand near MCX Control Station. On the mobile device in the Nice G.O. app, tap the plus sign at the top right of screen to Connect Your Device. Follow directions in app to Connect Your Device.

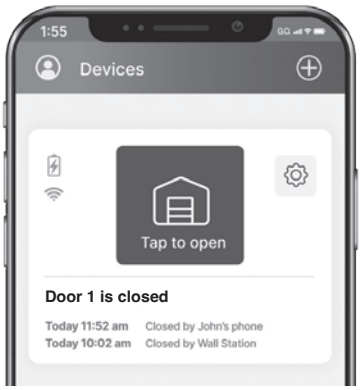

Available on the App Store

GET IT ON Google Play

11.7 CONNECT TO WI-FI

Wi-Fi Setup Instructions

1. Access Wireless Configuration
   - Navigate to Settings > Wireless Configuration.
   - A prompt will appear with on-screen instructions:

“Use the App for Wi-Fi setup, press OK to begin pairing.”

   - Press OK to continue.
   - The display will show:

“Waiting for Bluetooth connection…”

2. Wi-Fi Connection Process
   - Wait as the system will display the following messages in sequence:
     - **“Searching for Wi-Fi network…”**
     - **“Waiting for Wi-Fi credentials…”**
     - **“Connecting to SSID [XYZ]” (where [XYZ] is your network name)**
     - **“Connecting to cloud…”**
3. Connection Status
   - Once the process is completed, one of the following messages will appear:
     - **“Wi-Fi Connected”**
     - **Or “Connection Error”**
4. Completion
   - Upon successful connection, the system will automatically return to the Home screen.

11.8 OPEN/CLOSE LIMIT SETTING

Limit Setup Procedure

1. Access Limit Setup:
- Navigate to **Install & Setup**
- Enter PIN: **1380**
- Select **Limit Setup**
- A prompt message will appear:

"Before starting, manually move the door to the mid-travel position. Press OK when ready."
- Manually move the door to the **mid-travel position**
- Press **OK**.

2. Motor Direction Verification:

NOTE: This step appears only during initial setup. To change the motor's direction later, a factory reset is required.
- A new prompt appear:

"Use the OPEN button to check travel direction and select the appropriate feedback"
- Press the **OPEN** button to test the movement.
  - Use the ^ or v buttons to select the corresponding direction.
  - Press **OK** to confirm.
- The motor direction is now stored.

3. Set Open and Close Limits:
- After the motor direction is set, a prompt message will appear:

"Use the OPEN button to move the door to the open position, then press OK to confirm."
- Move the door to the desired open position.
- Press **OK** to confirm.
- The display will show: **"Open limit set"** - along with the corresponding open-position encoder value.
- Next, the screen will display:

"Use the CLOSE button to move the door to the closed position, then press OK to confirm."
- Move the door to the closed position.
- Press **OK** to confirm.
- The display will show: **"Close limit set"** - along with the corresponding closed-position encoder value.
- Once completed, the display will automatically return to the **Install** menu.

11.9 CHOOSE MODE OF OPERATION

Navigate to **Settings > Mode of Operation**.
Select the desired mode: **B2, D1, TS**, **C2, E2** or **T**.
Press **OK** to confirm your selection.

All operators leave the factory in the D1 mode (Constant pressure open and close) setting; please read all modes of operation and determine which operational mode is desired. The operator should remain in this mode until all connections and limit switch adjustments are completed.
The following table shows the options in each mode, the details come after.

B2 (Momentary on open and close):
- **Open Button:** Momentary activation opens the door. When door is closing, momentary activation reverses the door (OPEN OVERRIDE). Momentary contact from mid-stop opens the door to full open position. Constant activation when door is opening, bypass mid-stop if enabled.
- **Close Button**: Momentary on close.
- **Stop Button:** Momentary activation stops the door.
- **Single Button Device and Single Channel Transmitter, 3-Channel (1,2,3) Transmitter:**
  " **SEQUENTIAL FUNCTION:** Open/Stop/Close/Stop.
- **3-Button O/C/S Radio Transmitter:** Same as open, close and stop buttons.
- **Safety Devices:** When door is closing, momentary activation reverses the door.
- **Timer to Close:** N/A

C2 (Momentary open, constant pressure close):
- **Open Button:** Momentary activation opens the door. When door is closing, momentary activation reverses the door (OPEN OVERRIDE). Momentary contact from mid-stop opens the door to full open position. Constant activation when door is opening, bypass mid-stop if enabled.
- **Close Button:** Constant pressure on close. Door will stop when button is released
- **Stop Button:** Momentary activation stops the door.
- **Single Button device:**
  " SEQUENTIAL FUNCTION: Open/Stop/Constant pressure on close/stop.
  " COMMERCIAL FUNCTION: Open/Constant pressure on close/stop.
- Single channel transmitter, 3-channel (**1,2,3**) transmitter and 3-button O/C/S radio transmitter. Momentary activation opens the door. Momentary contact of OPEN button on 3-button (O/C/S) radio transmitter from mid-stop opens the door to full open position. Cannot close the door.
- **Safety Devices:** When door is closing, momentary activation reverses the door.
- **Timer to Close**: N/A

D1 (Constant pressure on open and close):
- **Open Button:** Constant pressure opens the door. Door stops when constant pressure is released. Constant pressure from mid-stop opens the door to full open position.
- **Close Button:** Constant pressure on close. Door will stop when button is released
- **Single Button device, single channel transmitter, 3-channel (1,2,3) transmitter and 3-button (O/C/S) radio transmitter:** N/A
- **Safety Devices:** When door is closing, momentary activation reverses the door.
- **Timer to Close:** N/A

TS: (Momentary on open and close, timer to close secure, STOP BUTTON DISABLES TIMER)
- **Open Button:** Momentary activation opens the door. When door is closing, momentary activation reverses the door. Momentary contact from mid-stop opens the door to full open position. Momentary contact at full-open refreshes the timer if enabled at full open. Momentary contact at full open position re-activates the timer if timer has been disabled previously by stop button.
  Constant activation when door is opening, bypass mid-stop if enabled.
- **Close Button:** Momentary on close.
- **Stop Button:** If door is opening or closing, momentary activation stops the door. Momentary activation while timer is counting at mid-stop or full

open deactivates the timer.
- **Single button device, single channel transmitter and 3-channel (1,2,3) radio transmitter:**
  " **SEQUENTIAL FUNCTION:** Open/Stop/Close/Stop.
  " **COMMERCIAL FUNCTION:** Open/Reverse/Refresh timer.
- **3-button O/C/S radio transmitter:** Same as open, close, stop buttons.
- **Safety Devices:** When door is closing, momentary activation reverses the door. Momentary activation refreshes the timer to close.
- **Timer to Close:** Closes the door from mid-stop or full open. Momentary activation of stop button will deactivate the timer. Timer resumes its normal operation upon momentary activation of open push button or once the close cycle is completed. If mid-stop is enabled and "Timer from mid-stop only" ON, timer is enabled only from mid-stop and disabled from full open. If mid-stop is enabled and "Timer from mid-stop only" OFF, timer is enabled from full open and mid-stop.

E2 (Momentary on open, constant pressure on close with roll-back feature):
- **Open Button:** Momentary activation opens the door. When door is closing, momentary activation reverses the door. Momentary contact from mid-stop opens the door to full open position. Constant activation when door is opening, bypass mid-stop if enabled.
- **Close Button:** Constant pressure on close. Door reverses to full open when button is released.
- **Single Button:**
  " SEQUENTIAL FUNCTION: Open/Stop/Constant pressure on Close/Stop.
  " COMMERCIAL FUNCTION: Open/Constant pressure on Close/Reverse.
- **Single Channel Device, 3-channel (1,2,3) transmitter and 3-button (O/C/S) radio transmitter:** Momentary activation opens the door. Momentary contact of OPEN button on 3-button (O/C/S) radio transmitter from mid-stop opens the door to full open position. Cannot close the door.
- **Safety Devices:** When door is closing, momentary activation reverses the door.
- **Timer to Close:** N/A

T (Momentary on open and close, timer to close, SAFETY ACTIVATION & STOP BUTTON DISABLE TIMER):
- **Open Button:** Momentary activation opens the door. When door is closing, momentary activation reverses the door. Momentary contact from, mid-stop opens the door to full open position. Momentary contact at full-open refreshes the timer if enabled at full open. Momentary contact at full open position re-activates the timer, if timer is disabled previously by stop button or safety device. Constant activation when door is opening, bypass mid-stop if enabled.
- **Close Button:** Momentary on close.
- **Stop Button:** if door is opening or closing, momentary activation stops the door. Momentary activation while timer is counting at mid-stop or full open de-activates the timer.
- **Single Button Device, single channel and 3-channel (1,2,3) radio transmitter:**
  " SEQUENTIAL FUNCTION: Open/Stop/Close/Reverse.
  " COMMERCIAL FUNCTION: Open/Reverse/Refresh timer.
- **3-Button (O/C/S) transmitter:** Same as open, close, stop buttons.
- **Safety Devices:** When door is closing, momentary activation reverses the door to full open AND DISABLES TIMER.
- **Timer to Close:** Closes the door from mid-stop or full open. Momentary activation of stop button will de-activate the timer. When door is closing, momentary activation of safety devices will reverse the door to mid-stop (if enabled) or full open and de-activates the timer. Timer resumes its normal operation upon momentary activation of open push button or once the close cycle is completed. If mid-stop is enabled and "Timer from mid-stop only" dip-switch is ON, timer is enabled only from mid-stop and disabled from full open. If mid-stop is enabled and "Timer from mid-stop only" dip-switch is OFF, timer is enabled from full open and mid-stop.

PLEASE NOTE: Programming must start from the full closed position.

11.10 FIRMWARE UPDATE

1. Navigate to **Info & Diagnostic > Update Firmware.**
2. Press **OK** to begin the firmware check.
   - If the firmware is up to date, the message **"NO UPDATES AVAILABLE"** will be displayed.
   - If a newer version is available, the message **"NEW VERSION AVAILABLE"** will appear for both the **wall station** and the **main control board**.
3. Use the **Up** and **Down** buttons to view update details and select the version you wish to install.
4. Press **OK** to start the update process.
5. Press **Return** to go back to the previous menu at any time.

11.11 RUN-TIMER

Run Timer is the average amount of time the motor is allowed to run after receiving an open or close command. After the motor completes **several full open–close cycles**, the system automatically updates the run timer to reflect the **average duration of the last several cycles** for opening and closing.

11.12 MID-STOP SETUP

To Set Mid-Stop:
1. Navigate to **Install & Setup > Operational Settings > Mid-Stop > Enable.**
2. Follow the on-screen prompt: use the ⌃ and ⌄ buttons to move the door to the desired mid-stop position.
3. Select Set Mid-Stop and press **OK** to confirm.
4. The display shows:

"Mid-Stop set successfully."

To Disable Mid-Stop:
1. Navigate to **Install & Setup > Operational Settings > Mid-Stop > Disable.**
2. The display shows:

"Mid-Stop disabled."

11.13 DELAY ON CLOSE SETUP

To Set Delay on Close:
1. Navigate to **Install & Setup > Operational Settings > Delay on Close.**
2. Follow the on-screen prompt: use the arrows to set desired delay on close and press **OK** to confirm.
3. The display shows:
"Delay on close set successfully."

To Disable Delay on Close:
1. Navigate to **Install & Setup > Operational Settings > Delay on Close.**
2. Follow the on-screen prompt: use the arrows to set desired delay on close to 0s/OFF

11.14 RECEIVER PROGRAMMING

This logic board has a built-in 372 MHz radio receiver and can only be used with Nice single button, 3-button (OPEN/CLOSE/STOP) and 3-channel radio transmitters.

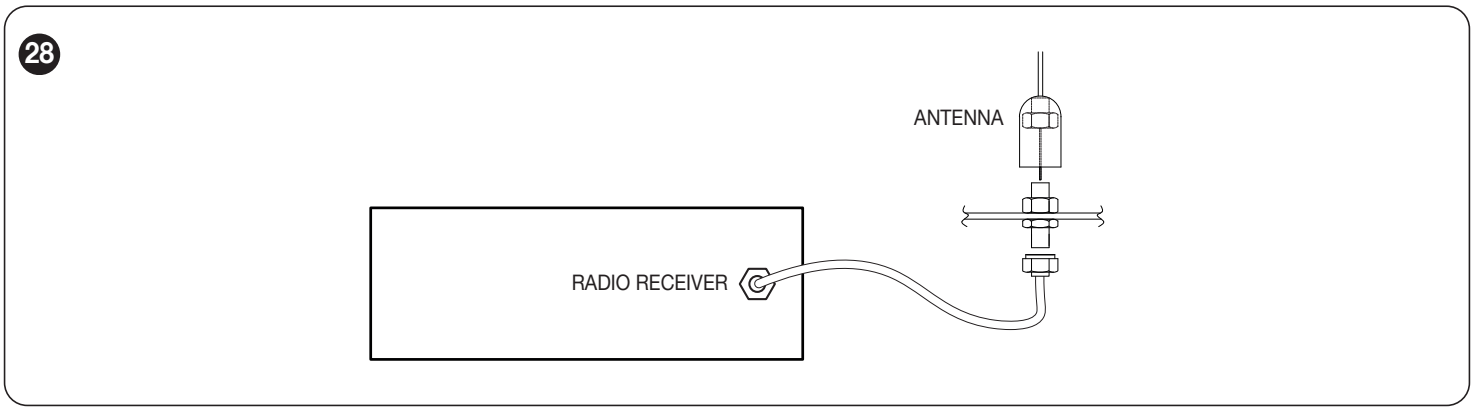

11.15 INSTALLING THE ANTENNA

Direct Connection:
Attach the antenna when supplied with the operator to the F connector on the control box. For best reception, keep antenna wire straight and away from metal objects.

Remote Antenna Mounting:
1. Connect an optional coax extension cable to the **F** connector on the control box.
2. Mount the antenna holder (not provided) outside the enclosure and attach the antenna.
3. Position the antenna wire straight. For best reception, keep it away from metal surfaces.

PLEASE NOTE: Do not route coax cable near any moving parts of the operator. If necessary, secure coax wire away from any moving parts.

11.16 PROGRAMMING THE ON-BOARD RADIO RECEIVER

WARNING! During programming, door operator will activate. Keep people and objects away from door.

Setting Up Radio Controls:
Navigate to **Settings or the Install & Setup menu > Learn / Erase**
Transmitters, three options are available:

Learn (Add a New Transmitter)
To connect a new transmitter:
1. Select Learn from the Learn / Erase Transmitters menu.
A prompt will appear:
"Hold transmitter button to learn transmitter."
2. While pointing the transmitter at the operator's control box, press any button on the transmitter.
3. When the control board successfully learns the transmitter code, the message
4. **"Transmitter Paired"** will appear on the wall station screen.

Erase (Remove a Specific Transmitter)
1. Select Erase from the Learn / Erase Transmitters menu.
A prompt will appear:
"Hold transmitter button to erase transmitter."
2. While pointing the transmitter at the operator's control box, press any button on the transmitter.
3. The transmitter will be removed from memory, and the message:
"Transmitter Erased" will appear on the wall station screen.

Erase All Transmitters
(Available only in the Install & Setup menu)
1. Select **Erase All Transmitters** from the menu.
2. Press **OK** to confirm.
3. A confirmation message will appear:
"Are you sure you want to erase all transmitters? This operation cannot be undone. Press OK to proceed."
4. Press OK to complete the process. Once erased is finished, the message:
"Transmitters erased" will appear on the screen.

PLEASE NOTE: A maximum of 999 transmitters can be programmed for the same receiver. If more than 999 are required, consult factory.

11.17 REPLACING REMOTE CONTROL BATTERIES

The batteries (lithium, 3V) should produce power for up to 5 years. To replace the battery, open the transmitter by removing the screws on the back of the transmitter. Match the positive and negative terminals of the battery to the positive and negative terminals of the transmitter.

PLEASE NOTE: The receiver and transmitter comply with part 15 of the FCC rules with RSS-210 of industry Canada. Operation is subject to the following two conditions: (1) this device may not cause harmful interference, and (2) this device must accept any interference received, including interference that may cause undesired operation.

PLEASE NOTE: If an external radio-receiver (Nice or other) is used instead of the built-in radio receiver, it is highly recommended to disconnect the co-axial cable from the logic board.

PLEASE NOTE: When using any external receiver, the Nice on-board receiver should not be used.

12 APPENDIX I: INSTALLATION OF NICE N-1 OR N-4 PHOTOCELLS

12.1 SAFETY PRECAUTIONS INSTALLATION

WARNING! Nice MK00649 NEMA-1 and FRABA MK00697 NEMA 4/4X infrared photo systems are for use only with Nice logic board operators. Use of this device on other than recommended operators can lead to severe or fatal injury. Follow these instructions carefully.

For momentary activation on close, the Nice photobeams (or a Nice 2-wire monitored edge), must be installed as part of the operator system. If a Nice 2-wire monitored edge or the Nice infrared photobeam system is not installed (or not operating correctly), the operator will only operate in fault mode "constant pressure to close".

READ and FOLLOW all installation instructions.

1. Before installing the photo beam, read the door or gate operator's instruction manual fully, so you are aware of all of the unit's functions and features.
2. Wear protective gloves and eye protection when using tools.
3. Before installing photo beam, disconnect all power to door operator to prevent unintended operation and have the door full open or close.
4. Do not reconnect power to the door or gate operator until instructed to do so.
5. Only install photobeams on a properly functioning door or gate operator.
6. Installation and wiring must comply with local building and electrical codes. This device is not intended and must not be installed in an explosive environment.

WARNING! Keep fingers and other body parts away from all moving parts of the door and gate operator system while the system is being operated.

WARNING! To prevent unintended operation, disconnect power to the door or gate operator prior to installing the photobeam system.

12.2 INSTALLATION NICE N-1 PHOTOCELL (MK00649)

PLEASE NOTE: The MK00649 photocell system has a maximum range of 24 ft. Sun visor protector optional.

PLEASE NOTE: Photo beams should be mounted as close to the door track inside the door to offer maximum entrapment protection.

12.2.1 WALL INSTALLATIONS

1. Select a location on the wall no more than 6 inches from the floor to install wall mounting brackets on the left and right side of the door. Both brackets must be mounted at the same height for proper alignment.
2. Drill holes in the wall and attach brackets to the wall using screws (1) and nails (2) provided as shown in ***Figure 29***.

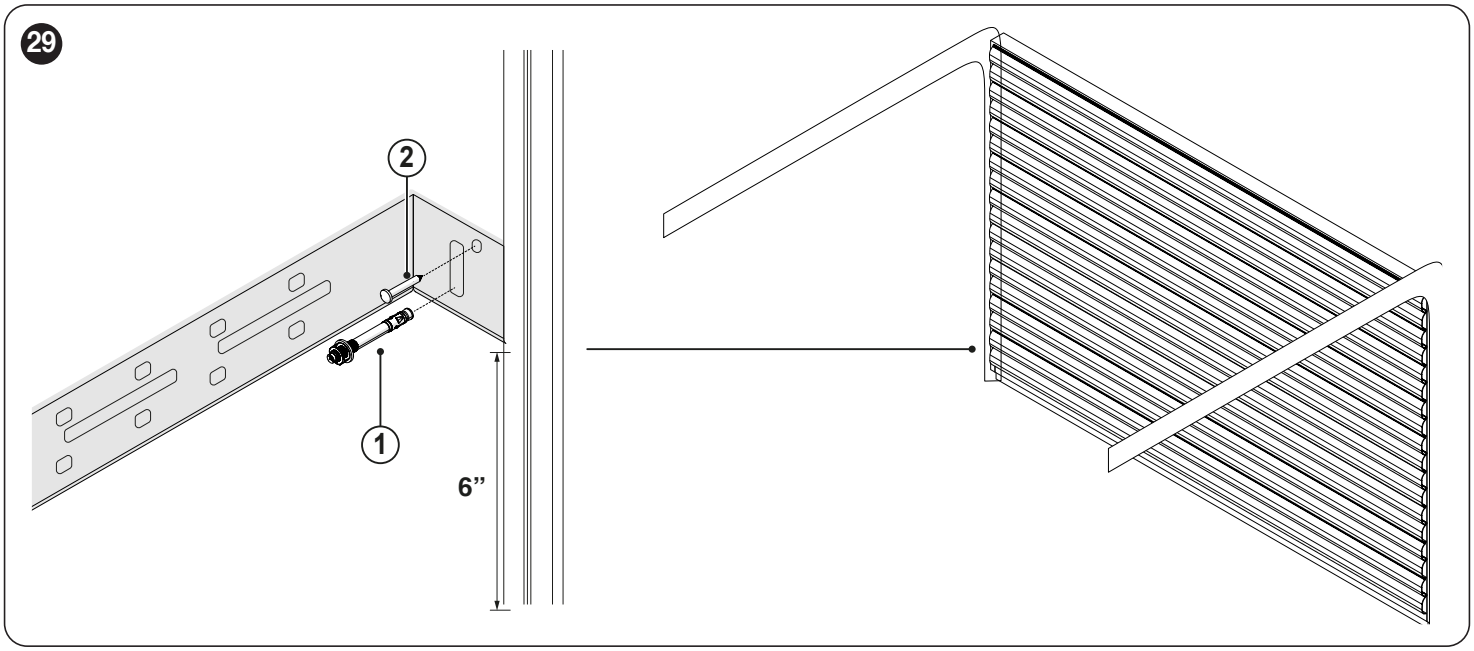

3. Using the wing nuts, attach the receiver and transmitter of the photo system to the mounting brackets (with arrow pointing up). Note that the receiver and transmitter can be installed on the left side or right side of the door.
4. Adjust the position of the transmitter and receiver on the slot of the brackets. Secure the receiver and transmitter to the mounting brackets as shown in ***Figure 30***.

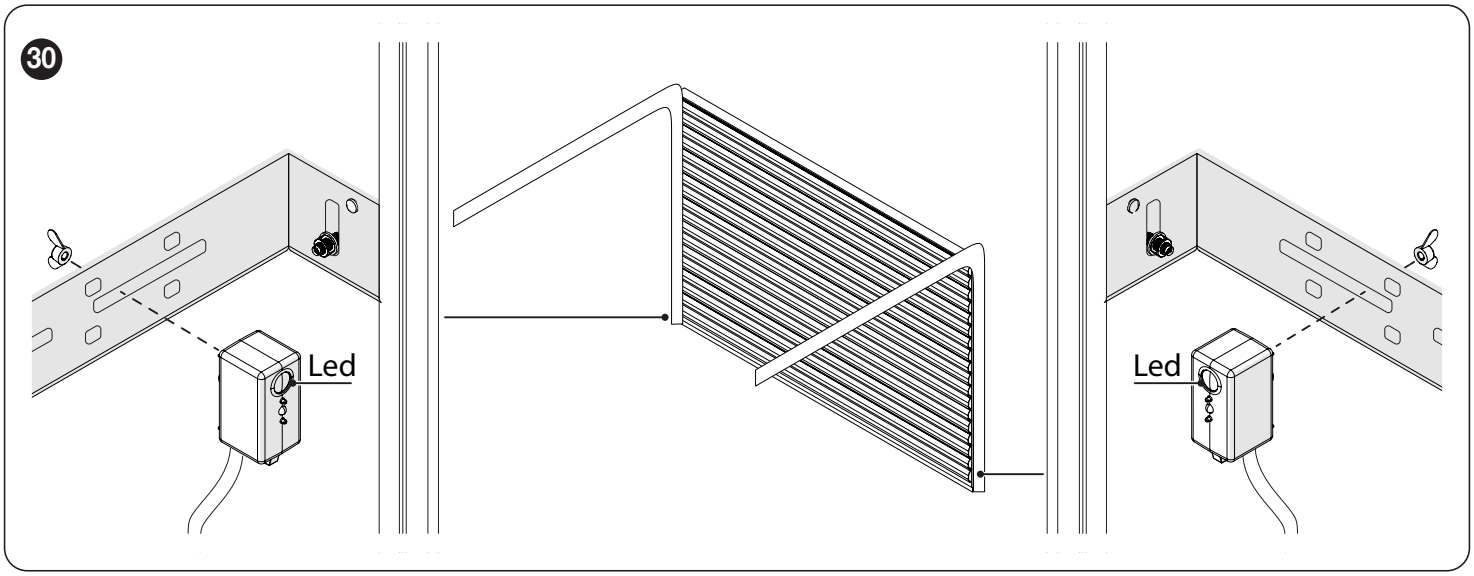

5. Pair the two white wires and the two white/gray wires together from transmitter and receiver.
6. Connect these paired wires to the P1 and P2 terminals on the logic board as shown in ***Figure 31***.

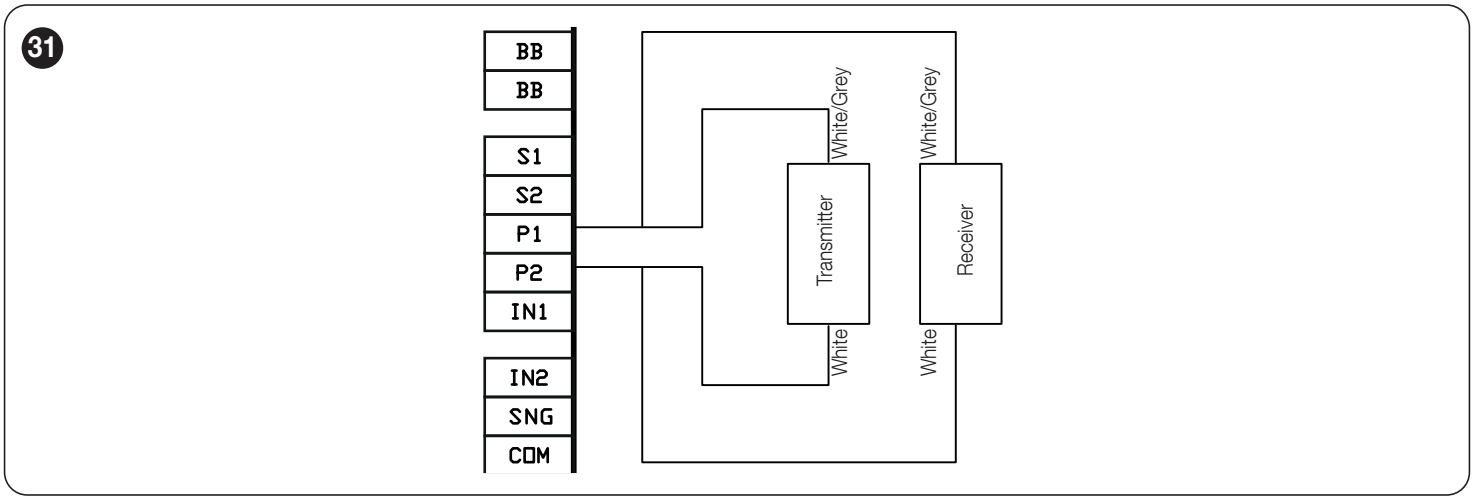

12.3 INSTALLATION FRABA N-4/4 THRU-BEAM PHOTOCELL (MK00697)

PLEASE NOTE: The MK00697 photocell system has a maximum range of 45 ft. Sun Visor protector optional.

1. Select a location on the wall no more than 6 inches from the floor to install wall mounting brackets on the left and right side of the door. Both brackets must be mounted at the same height for proper alignment.
2. Drill holes in the wall and attach brackets to the wall using screws provided as shown in ***Figure 32***.

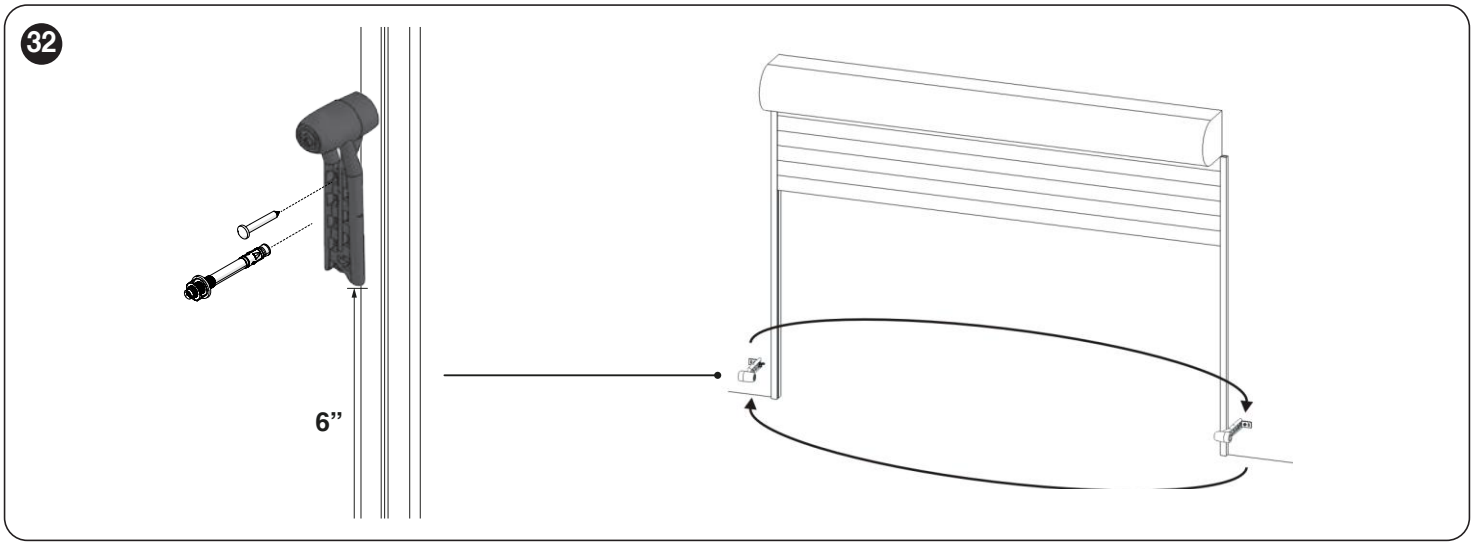

3. Plug sensors into flexible adapters as shown in ***Figure 33***. Please note that the 2 brackets are not identical. The receiver (Rx) must be installed into the receiver adapter and the transmitter (Tx) must be installed into the transmitter adapter.

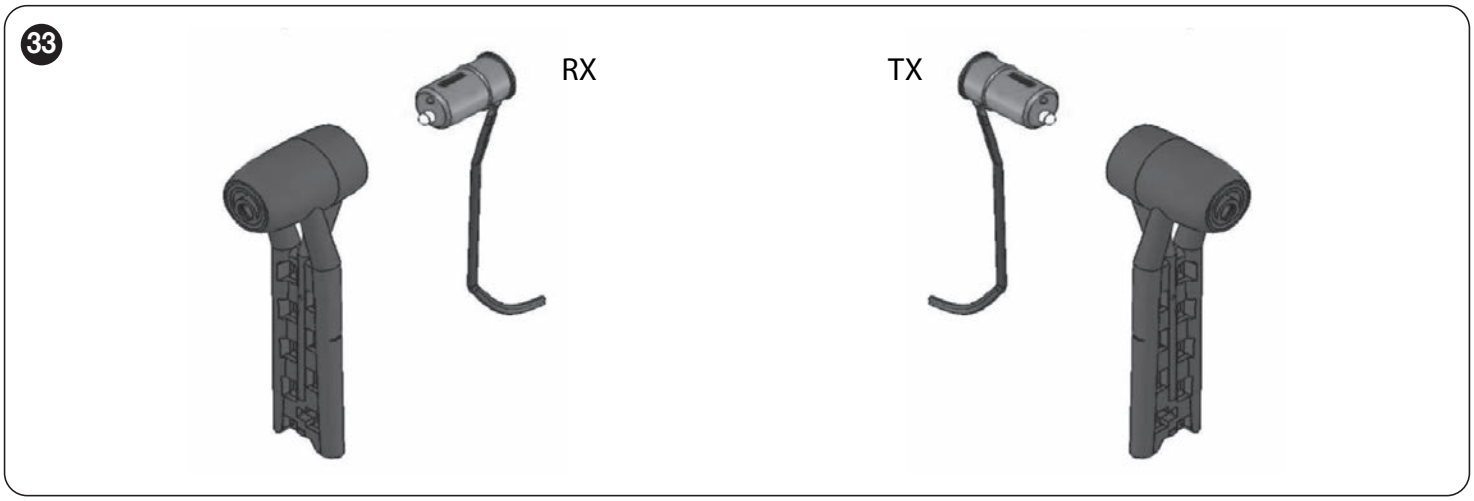

4. Pair the two black and the two black with white tracer wires together from transmitter and receiver. Connect these paired wires to the P1 and P2 terminals on the logic board as shown in ***Figure 34***. Use minimum 18 gauge wires and secure the wires to wall or ceiling.

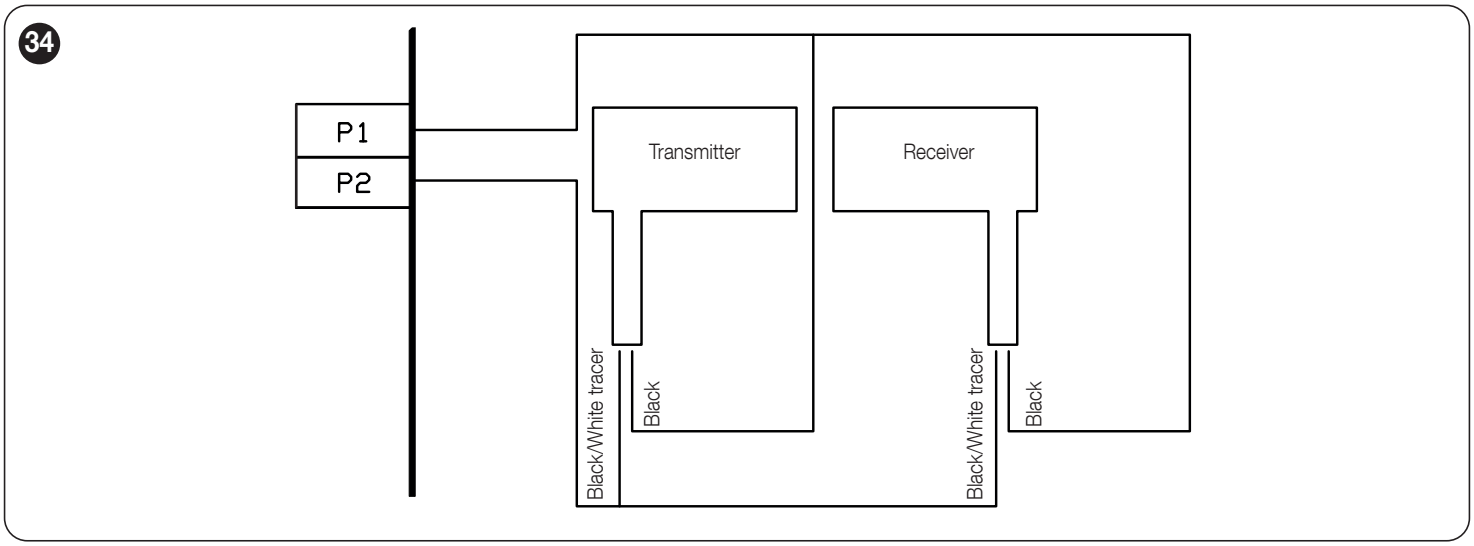

5. Turn the power on to the operator. Align transmitter and receiver by adjusting angle and height of the fixture (***Figure 35***).

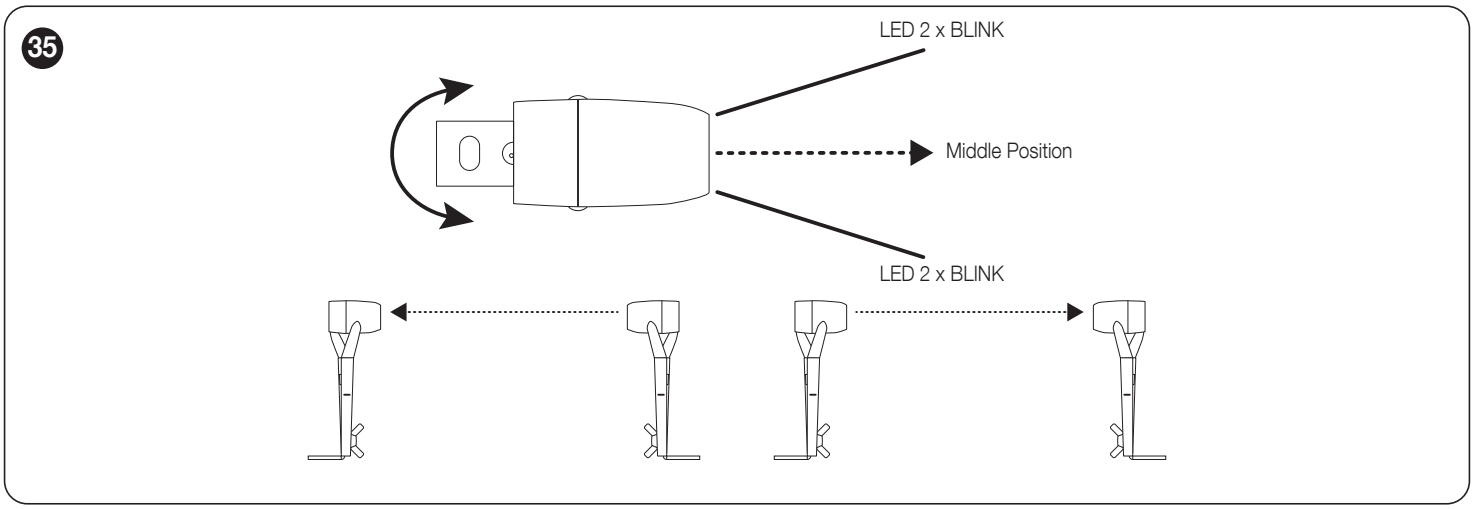

6. Utilize LEDs on photocells for alignment and trouble shooting. Make sure to tighten screws and wing nuts after photocells are aligned.
- **Red LED (ON), Green LED (ON):** Normal operation
- **Red LED (ON), Green LED (OFF):** No power. Verify wiring
- **Red LED (Blinking twice), Green LED (ON):** Bad Alignment, or Obstructed Beam, or Rx defective
- **Red LED (Blinking twice), Green LED (OFF):** Check power and wiring to Rx, or Rx defective
- **Red LED (Blinking three times), Green LED (ON):** Rx receiving sunlight (or interference). Install visor or interchange position of transmitter and receiver to reduce sunlight affecting receiver.

To test the photo system: Open the door to full open position. Close the door. When door is closing, obstruct the beam. The door should stop and reverse.

13 APPENDIX II: EMERGENCY MANUAL OPERATION

WARNING! risk of injury or death:
- Never attempt to manually operate a malfunctioning or damaged door.
- Do not attempt to use emergency disconnect system while operator is running.
- Power to the operator should be turned off prior to operating manually.

The **MCX-J**, **MCX-H** and **MCX-GH** operators are equipped with an emergency disconnect device that allows the door to be operated manually in the event of a power loss or other emergency. This feature should not be used to operate a malfunctioning or damaged door.

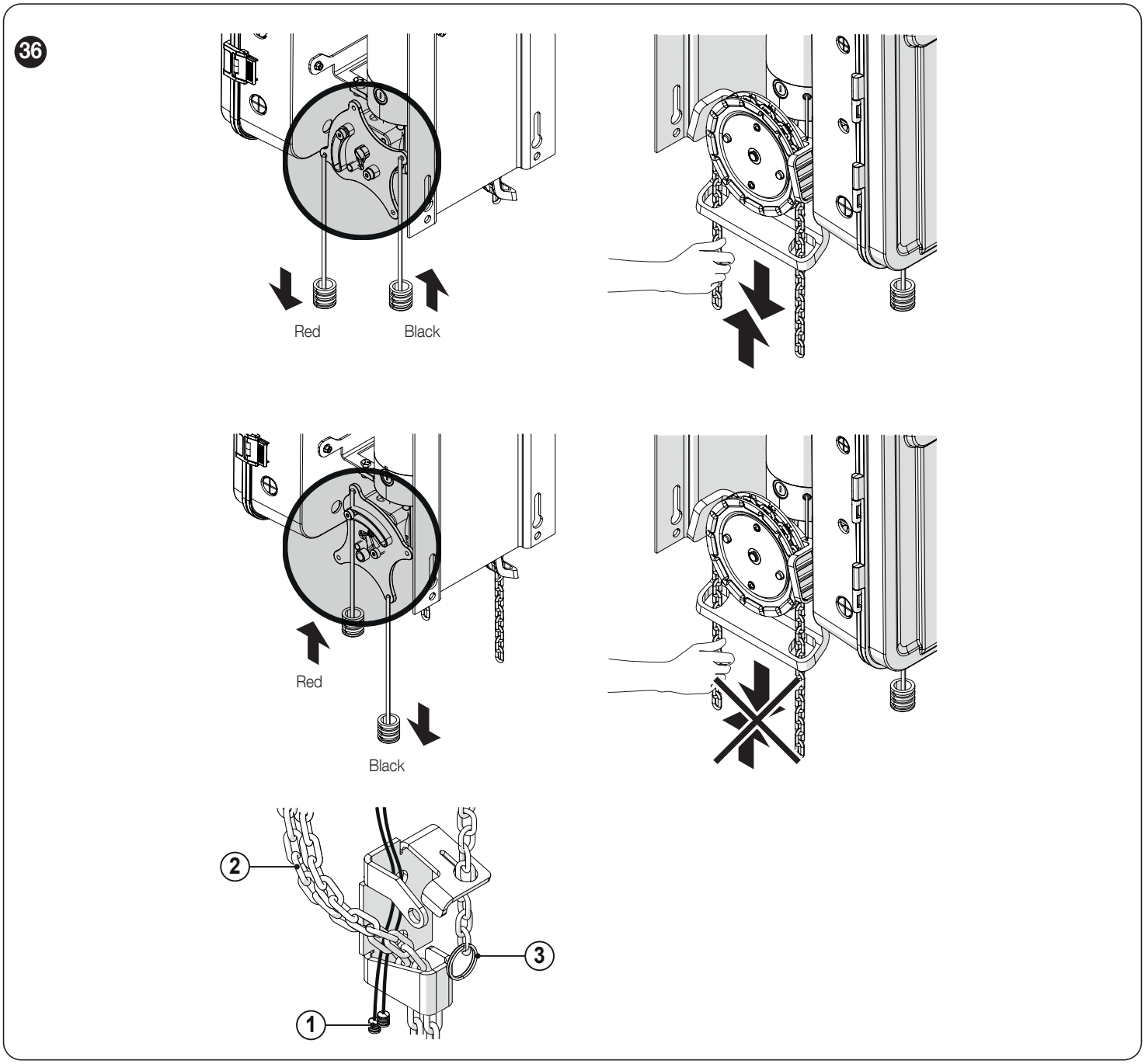

1. Emergency disconnect cables
2. Chain hoist chain (MCX-H & MCX-GH only)
3. Brake sash chain

To engage manual operation: Pull the **RED** cable downward. For operators equipped with a brake, pull the disconnect chain through the keyhole and lock it in the slot.
To return to automatic operation: Pull the **BLACK** cable downward. If the brake was disengaged, release the disconnect chain from the keyhole.

- **MCX-J**: Move the door by hand.
- **MCX-H / MCX-GH**: Operate the door using the hand chain.

Note: Secure hand chain and/or cables in the chain keeper when not in use.

MCX-J

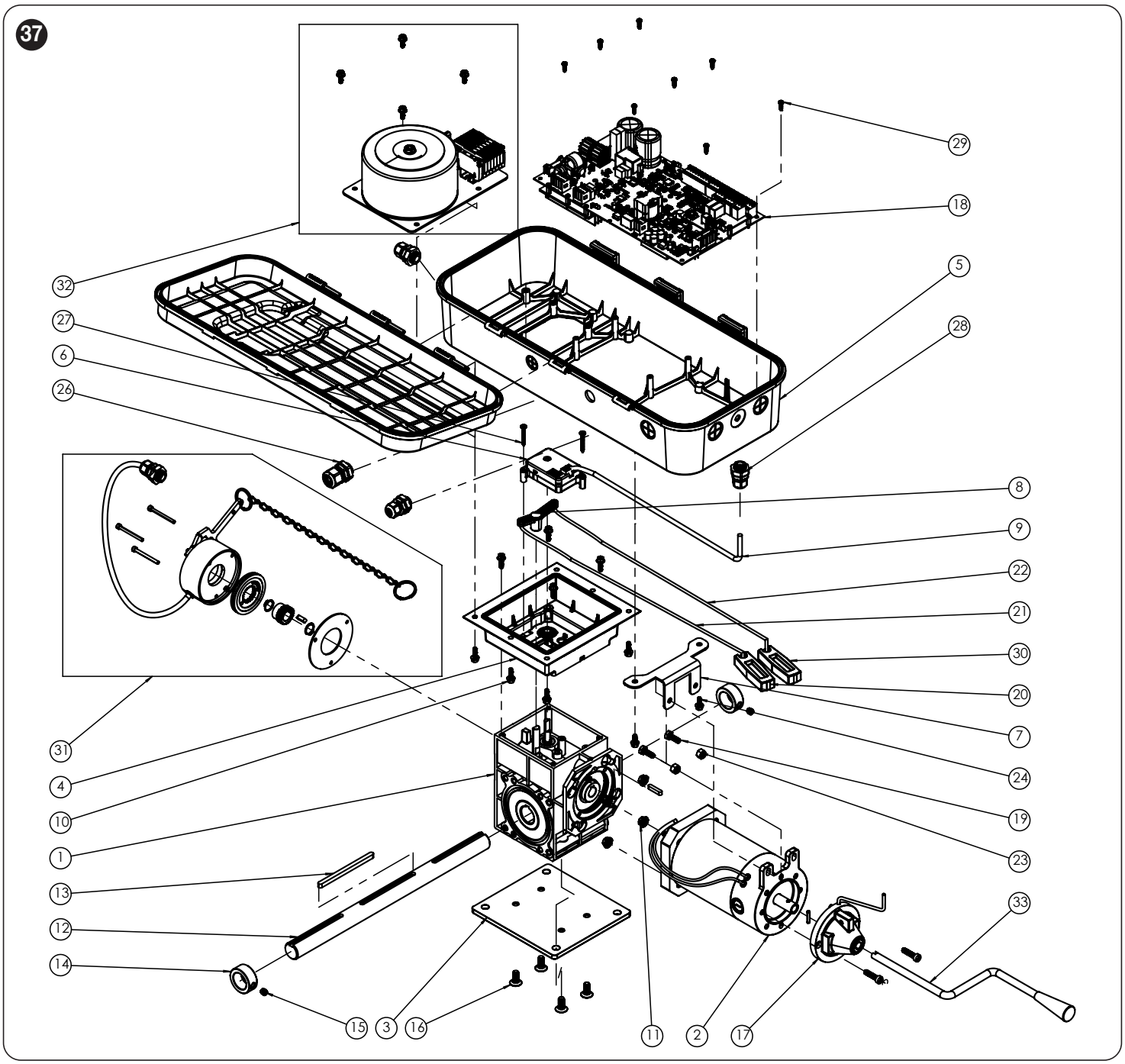

ITEM NO.	PART NUMBER	DESCRIPTION	QTY.
1	MC00088	Gearbox - clutch, 65 Nm, 60:1 ratio	1
2	MB01091	Motor - 0.5 HP, 90 VDC, 3300 RPM	1
3	MM00642	Base plate	1
4	ML00157	Plastic spacer 7.35” x 6.6” x 2.7”	1
5	ML00156	Plastic control box enclosure	1
6	ENAS003	Encoder	1
7	MM00643	Support L - bracket	1
8	MR00056	Clutch - PRO-J plastic clutch lever	1
9	MK01756	Encoder cable	1
10	MF00247	Steel flanged hex head screws, zinc plated	10
11	MG00011	Ribbed hex nut 1/4”-20 UNC	4
12	ME00114	Drive shaft 1” x 15”	1
13	ME00117	Keyway - 1/4” sq x 1-1/4” long (part of ME00114)	1
14	MH00007	Collar 1” ID - 1.5” OD	2
15	MQ00008	Set screw 5/16”-18 UNC	2
16	MF00246	18-8 SS steel hex drive flat screw	4
17	NDSP0008	Nice - KU series hand crank assembly (KUS1-10)	1

ITEM NO.	PART NUMBER	DESCRIPTION	QTY.
18	MK01757	PCBA - main control board (parent)	1
19	MF00007	Hex head bolt 1/4”-20 UNC x 3/4”	2
20	MR00051	Clutch - lever handle black	1
21	MR00053	Clutch - lever rope black	1
22	MR00054	Clutch - lever rope red	1
23	MG00009	Hex nylon lock nut 1/4”-20 UNC	2
24	MF00046	10-32 x 1-1/4” Flanged hex head screws	6
25	ME00116	Keyway - 3/16” x 3/16” x 1-1/4” long (part of MB03091-1091)	1
26	MK01761	Strain relief - M20	1
27	MF00239	Screw - #8 x 1-1/4” L pan Phillips steel, zinc plated	2
28	MK01762	Strain relief - M16	3
29	MF00244	Screw - #4-20 x 1/2” L pan Phillips steel, zinc plated	8
30	MR00052	Clutch - lever handle black	1
31	MV00541	MCX N1 brake kit: MCX-J / MCX-H / MCX-GH	1
32	MV00540	Transformer kit 460-575/230 1000 VA MCX	1
33	MR00055	Hand crank handle	1

NOTE! Operator shown with optional wall mounting plate and brake.

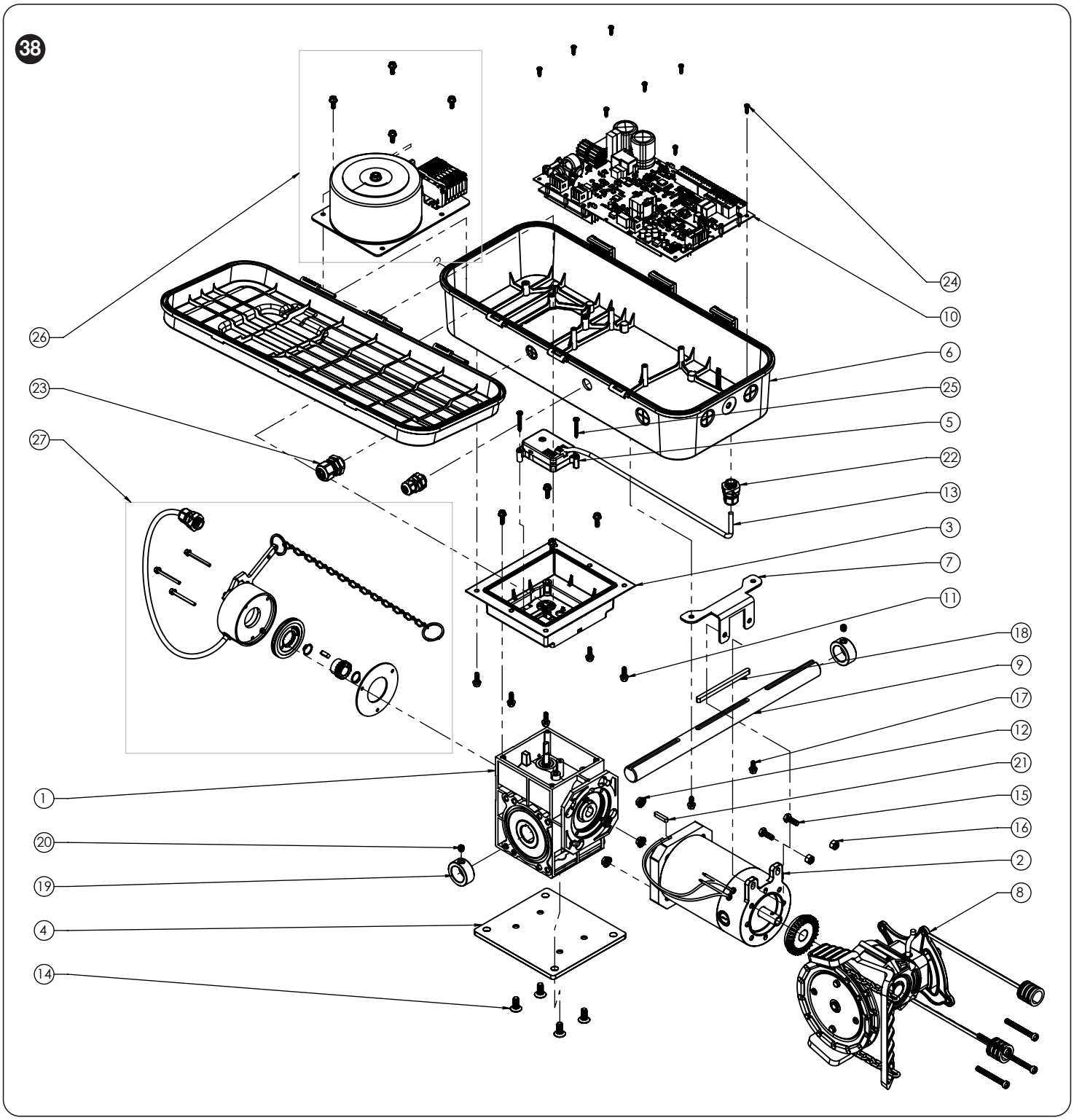

ITEM NO.	PART NUMBER	DESCRIPTION	QTY.
1	MC00087	Gearbox - 65 Nm, 60:1 ratio	1
2	MB03091	Motor - 1 HP, 90 VDC, 3300 RPM	1
3	ML00157	Plastic spacer 7.35” x 6.6” x 2.7”	1
4	MM00642	Base plate	1
5	ENAS003	Encoder	1
6	ML00156	Plastic control box enclosure	1
7	MM00643	Support L - bracket	1
8	MR00050	Chain hoist - 30:16 ratio (6” pulley & 9 m hand chain)	1
9	ME00114	Drive shaft - 1” x 15”	1
10	MK01757	PCBA - main control board (parent)	1
11	MF00247	Steel flanged hex head screws, zinc plated	10
12	MG00011	Ribbed hex nut - 1/4”-20 UNC	4
13	MK01756	Encoder cable	1
14	MF00246	18-8 SS steel hex drive flat screw	4

ITEM NO.	PART NUMBER	DESCRIPTION	QTY.
15	MF00007	Hex head bolt 1/4”-20 UNC x 3/4”	2
16	MG00009	Hex nylon lock nut 1/4”-20 UNC	2
17	MF00046	10-32 x 1-1/4” Flanged hex head screws	6
18	ME00117	Keyway - 1/4” sq x 1-1/4” long (part of ME00114)	1
19	MH00007	Collar 1” ID - 1.5” OD	2
20	MQ00008	Set screw 5/16”-18 UNC	2
21	ME00116	Keyway - 3/16” x 3/16” x 1-1/4” long (part of MB03091-1091)	1
22	MK01762	Strain relief - M16	2
23	MK01761	Strain relief - M20	1
24	MF00244	Screw - #4-20 x 1/2” L pan Phillips steel, zinc plated	8
25	MF00239	Screw - #8 x 1-1/4” L pan Phillips steel, zinc plated	2
26	MV00540	Transformer kit 460-575/230 1000 VA MCX	1
27	MV00541	MCX N1 brake kit: MCX-J / MCX-H / MCX-GH	1

NOTE! Operator shown with optional wall mounting plate and brake.

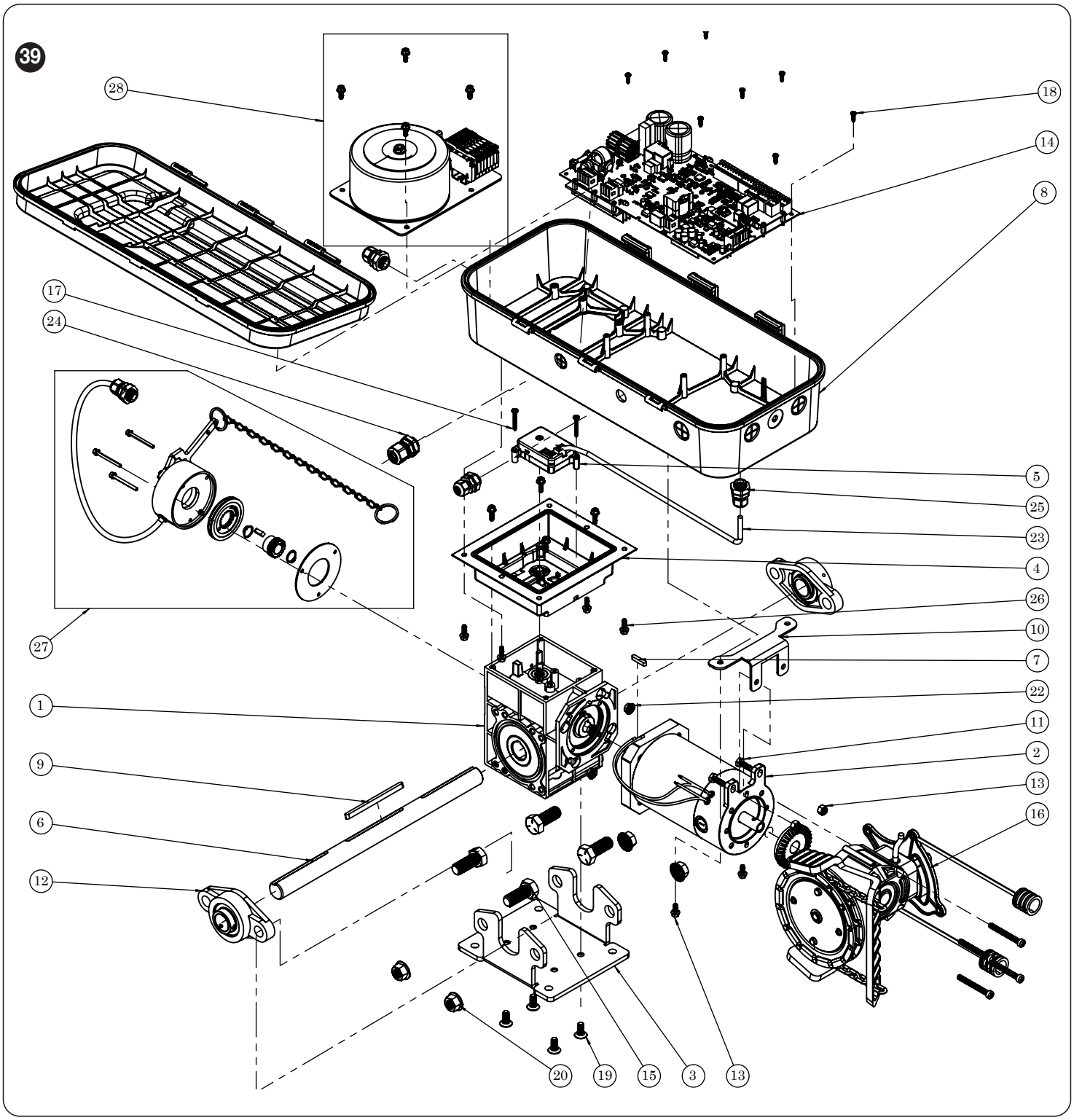

ITEM NO.	PART NUMBER	DESCRIPTION	QTY.
1	MC00087	Gearbox - 65 Nm, 60:1 ratio	1
2	MB03091	Motor - 1 HP, 90 VDC, 3300 RPM	1
3	MM00641	Metal - PRO-GH frame painted RAL 7016	1
4	ML00157	Plastic - spacer 7.35” x 6.6” x 2.7”	1
5	ENAS003	Encoder	1
6	ME00114	Drive shaft - 1” x 15”	1
7	ME00116	Keyway - 3/16” x 3/16” x 1-1/4” long (part of MB03091-1091)	1
8	ML00156	Plastic control box enclosure	1
9	ME00117	Keyway - 1/4” sq x 1-1/4” long (part of ME00114)	1
10	MM00643	Support L - bracket	1
11	MF00007	Hex head bolt - 1/4”-20 UNC x 3/4”	2
12	MH00015	Flange bearing C.I. 1” UCFL205 16 2 hole pillow block	2
13	MF00046	10-32 x 1-1/4” Flanged hex head screws	6
14	MK01757	PCBA - main control board (parent)	1

ITEM NO.	PART NUMBER	DESCRIPTION	QTY.
15	MF00083	Medium-strength grade 5 steel hex head screw	4
16	MR00050	Chain hoist - 30:16 ratio (6” pulley & 9 m hand chain)	1
17	MF00239	Screw - #8 x 1-1/4” L pan Phillips steel, zinc plated	2
18	MF00244	Screw - #4-20 x 1/2” L pan Phillips steel, zinc plated	8
19	MF00246	18-8 SS steel hex drive flat screw	4
20	MG00001	Ribbed hex nut - 1/2”-13 UNC	4
21	MG00009	Hex nylon lock nut - 1/4”-20 UNC	2
22	MG00011	Ribbed hex nut - 1/4”-20 UNC	4
23	MK01756	Encoder cable	1
24	MK01761	Strain relief - M20	1
25	MK01762	Strain relief - M16	3
26	MF00247	Steel flanged hex head screws, zinc plated	10
27	MV00541	MCX N1 brake kit: MCX-J / MCX-H / MCX-GH	1
28	MV00540	Transformer kit 460-575/230 1000 VA MCX	1

NOTE! Operator shown with optional wall mounting plate and brake.

15 APPENDIX IV: PCBA CONNECTION

All input connections have been shown in the figure below:

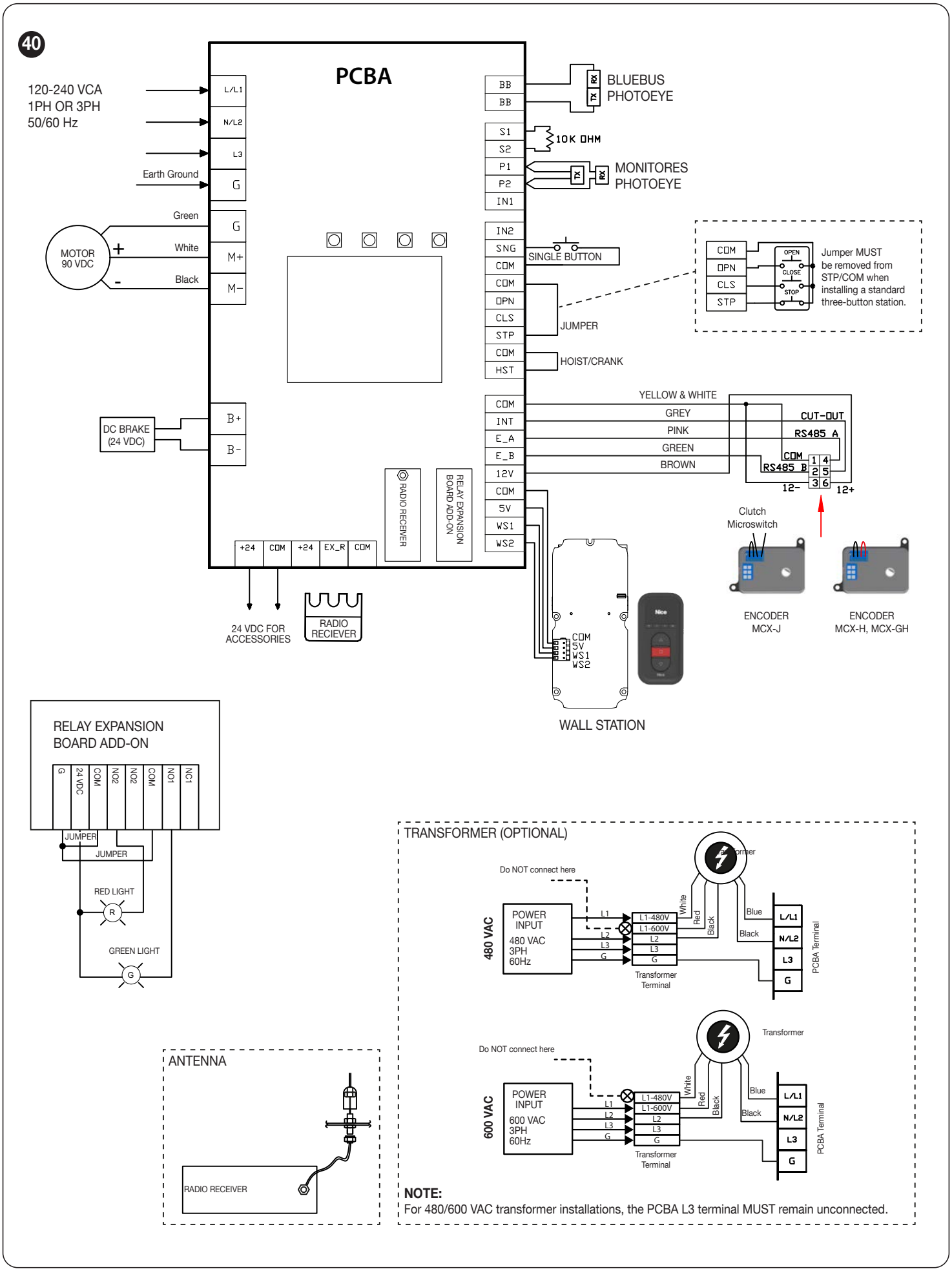

16 OPERATOR MAINTENANCE

WARNING! To reduce the risk of injury or death:

- Do not attempt to service the operator unless power supply has been disconnected.

Every 3 months:

1. Verify that door area is kept clean. Remove any obstructions that would prevent proper door operation.
2. Inspect manual function of the door. Make sure that door runs smoothly. If door does not manually open or close freely, have a qualified service person make repairs. Do not attempt to electrically operate a malfunctioning door.
3. Check for any excessive slack in chain. If chain adjustment is required, verify and adjust limit positions, if necessary.
4. Lubricate chain.
5. Verify that motor and operator run smoothly and quietly.
6. Perform any pending firmware updates.

Every 6 months:

1. Verify tightness of all fasteners and set screws.
2. Verify that operator is properly secured.
3. Inspect manual disconnect.
4. Perform 3-month inspections above.

Every 12 months:

1. Perform a complete service check.
2. Verify that inside of control box is clean and that grounding wires, terminations and power terminations do not show signs of corrosion.
3. Verify tightness of all terminal strip and electrical connections.
4. Verify power supply, voltage of input terminals during operation.
5. Verify that current consumption of operator corresponds to nameplate information.
6. Perform 3 month and 6 month inspections above.

Record service history in the table below:

Table 7

SERVICE DATE	SERVICE INTERVAL (CIRCLE ONE)	FINDINGS, CORRECTIONS AND NOTES:	TECHNICIAN NAME	SIGNATURE
	3 / 6 / 12 month			
	3 / 6 / 12 month			
	3 / 6 / 12 month			
	3 / 6 / 12 month			
	3 / 6 / 12 month			
	3 / 6 / 12 month			
	3 / 6 / 12 month			
	3 / 6 / 12 month			
	3 / 6 / 12 month			
	3 / 6 / 12 month			
	3 / 6 / 12 month			
	3 / 6 / 12 month			
	3 / 6 / 12 month			
	3 / 6 / 12 month			
	3 / 6 / 12 month			
	3 / 6 / 12 month			
	3 / 6 / 12 month			
	3 / 6 / 12 month			
	3 / 6 / 12 month			
	3 / 6 / 12 month			
	3 / 6 / 12 month			
	3 / 6 / 12 month			
	3 / 6 / 12 month			
	3 / 6 / 12 month			
	3 / 6 / 12 month			
	3 / 6 / 12 month			
	3 / 6 / 12 month			
	3 / 6 / 12 month			
	3 / 6 / 12 month			
	3 / 6 / 12 month			
	3 / 6 / 12 month			
	3 / 6 / 12 month			
	3 / 6 / 12 month			
	3 / 6 / 12 month			
	3 / 6 / 12 month			
	3 / 6 / 12 month			
	3 / 6 / 12 month			
	3 / 6 / 12 month			
	3 / 6 / 12 month			
	3 / 6 / 12 month			
	3 / 6 / 12 month			
	3 / 6 / 12 month			
	3 / 6 / 12 month			
	3 / 6 / 12 month			
	3 / 6 / 12 month			
	3 / 6 / 12 month			
	3 / 6 / 12 month			
	3 / 6 / 12 month			
	3 / 6 / 12 month			

SERVICE DATE	SERVICE INTERVAL (CIRCLE ONE)	FINDINGS, CORRECTIONS AND NOTES:	TECHNICIAN NAME	SIGNATURE
	3 / 6 / 12 month			
	3 / 6 / 12 month			
	3 / 6 / 12 month			
	3 / 6 / 12 month			
	3 / 6 / 12 month			
	3 / 6 / 12 month			
	3 / 6 / 12 month			
	3 / 6 / 12 month			
	3 / 6 / 12 month			
	3 / 6 / 12 month			
	3 / 6 / 12 month			
	3 / 6 / 12 month			
	3 / 6 / 12 month			
	3 / 6 / 12 month			
	3 / 6 / 12 month			
	3 / 6 / 12 month			
	3 / 6 / 12 month			
	3 / 6 / 12 month			
	3 / 6 / 12 month			
	3 / 6 / 12 month			
	3 / 6 / 12 month			
	3 / 6 / 12 month			
	3 / 6 / 12 month			
	3 / 6 / 12 month			
	3 / 6 / 12 month			
	3 / 6 / 12 month			
	3 / 6 / 12 month			
	3 / 6 / 12 month			
	3 / 6 / 12 month			
	3 / 6 / 12 month			
	3 / 6 / 12 month			
	3 / 6 / 12 month			
	3 / 6 / 12 month			
	3 / 6 / 12 month			
	3 / 6 / 12 month			
	3 / 6 / 12 month			
	3 / 6 / 12 month			
	3 / 6 / 12 month			
	3 / 6 / 12 month			
	3 / 6 / 12 month			
	3 / 6 / 12 month			
	3 / 6 / 12 month			
	3 / 6 / 12 month			
	3 / 6 / 12 month			

Technical Support:
877-888-1116
Technical Support Hours:
M – F, 8:00 a.m. – 6:00 p.m. ET

Nice North America c/o Customer Service 5919 Sea Otter Place, Suite 100
Carlsbad, CA 92010

Nice

Niceforyou.com

©2026 Nice North America LLC.
All rights reserved.

MN00273 Rev-A